US007132759B2

(12) **United States Patent**
Alstot et al.

(10) **Patent No.: US 7,132,759 B2**
(45) **Date of Patent: Nov. 7, 2006**

(54) **HYDROCRATIC GENERATOR**

(76) Inventors: **Gary Alstot**, 3099 Cresta Way, Laguna Beach, CA (US) 92651; **Warren Finley**, 1076 Skyline Dr., Laguna Beach, CA (US) 92651; **Anthony T. Jones**, 22 Battery St., Suite 401, San Francisco, CA (US) 94111; **Edward Pscheidt**, 24721 Georgia Sue, Laguna Hills, CA (US) 92653; **Geoffrey E. Dolbear**, 23050 Aspen Knoll Dr., Diamond Bar, CA (US) 91765

(*) Notice: Subject to any disclaimer, the term of this patent is extended or adjusted under 35 U.S.C. 154(b) by 0 days.

(21) Appl. No.: **10/777,458**

(22) Filed: **Feb. 12, 2004**

(65) **Prior Publication Data**

US 2005/0082837 A1 Apr. 21, 2005

Related U.S. Application Data

(63) Continuation-in-part of application No. 10/404,488, filed on Mar. 31, 2003, now abandoned, and a continuation-in-part of application No. 10/357,007, filed on Feb. 3, 2003, which is a continuation of application No. 09/952,564, filed on Sep. 12, 2001, now Pat. No. 6,559,554, which is a continuation-in-part of application No. 09/415,170, filed on Oct. 8, 1999, now Pat. No. 6,313,545.

(60) Provisional application No. 60/141,349, filed on Jun. 28, 1999, provisional application No. 60/123,596, filed on Mar. 10, 1999.

(51) **Int. Cl.**
F03D 9/00 (2006.01)

(52) **U.S. Cl.** **290/54**; 290/43

(58) **Field of Classification Search** 290/42, 290/43, 53, 55
See application file for complete search history.

(56) **References Cited**

U.S. PATENT DOCUMENTS

3,683,627	A *	8/1972	Girden	405/52
3,855,367	A *	12/1974	Webb	261/77
4,051,810	A *	10/1977	Breit	119/51.04
4,135,364	A *	1/1979	Busick	60/325
4,180,980	A *	1/1980	Marks et al.	60/398
4,311,012	A *	1/1982	Finley	60/641.7
4,470,544	A *	9/1984	Bronicki et al.	239/2.1
4,603,553	A *	8/1986	Ridgway	60/641.7
4,947,647	A *	8/1990	Jensen	60/659
5,106,230	A *	4/1992	Finley	405/52
6,313,545	B1 *	11/2001	Finley et al.	290/54

* cited by examiner

Primary Examiner—Nicholas Ponomarenko
(74) *Attorney, Agent, or Firm*—Colin P. Abrahams

(57) **ABSTRACT**

A mixing apparatus for mixing relatively low salinity fluid with relatively high salinity fluid comprises a housing having an upper end and a lower end, a fluid inlet at or near the lower end, and a fluid outlet at or near the upper end, wherein the relatively high salinity fluid in use enters the housing through the fluid inlet and is discharged from the housing through the fluid outlet. A feed tube is provided and has a first end connectable to a source of relatively low salinity fluid and second end for introducing relatively low salinity fluid to the housing to mix the relatively high salinity fluid with the relatively low salinity fluid to form a fluid mixture. At least one power generator is associated with the housing, and is driven by the mixing of the relatively high salinity fluid with the relatively low salinity fluid.

24 Claims, 22 Drawing Sheets

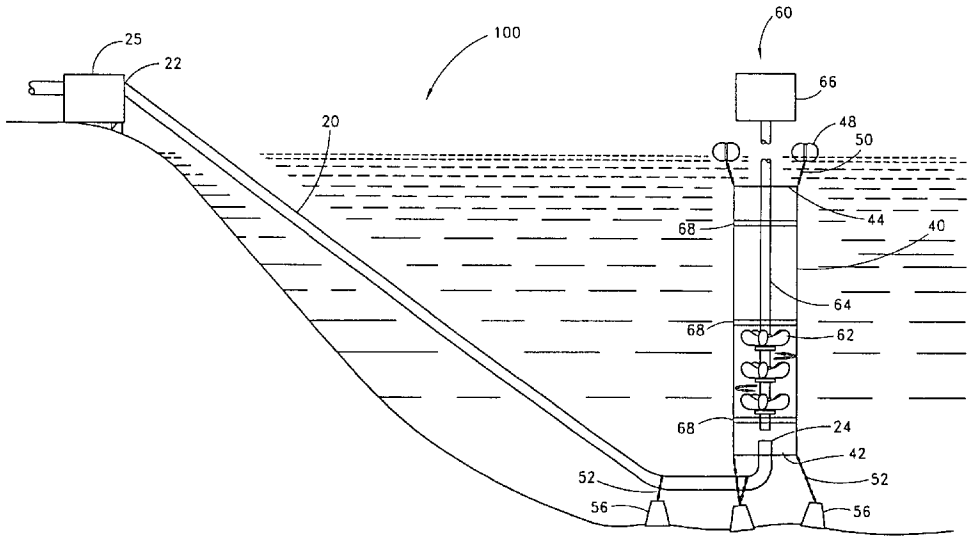

ClibPDF - www.fastio.com

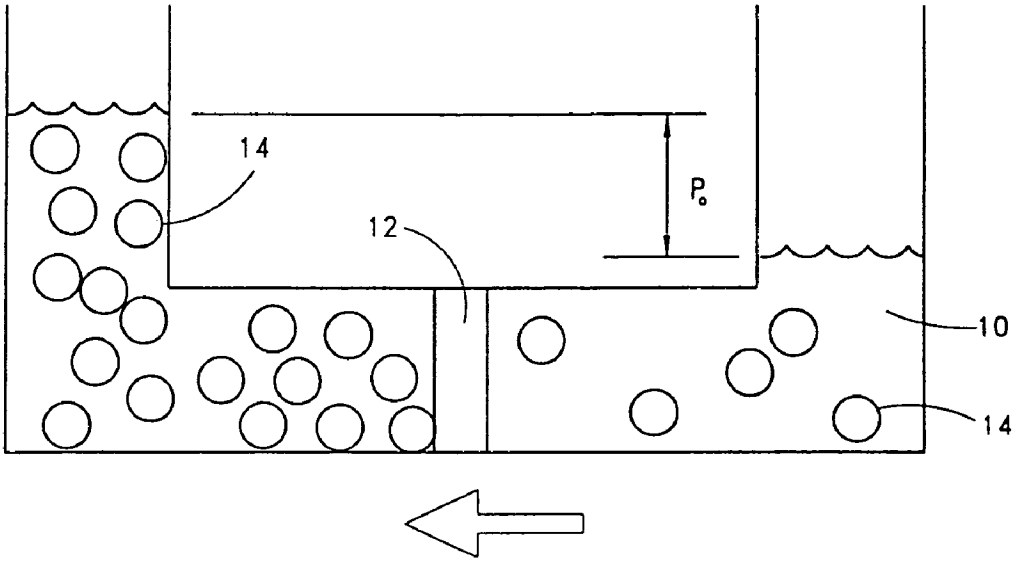

FIG. 1A
(PRIOR ART)

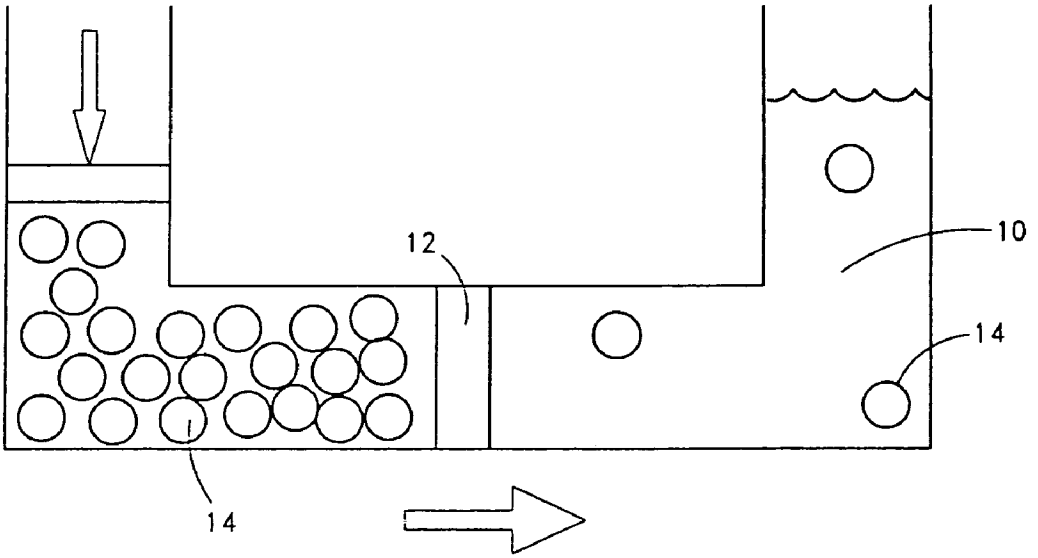

FIG. 1B
(PRIOR ART)

ClibPDF - www.fastio.com

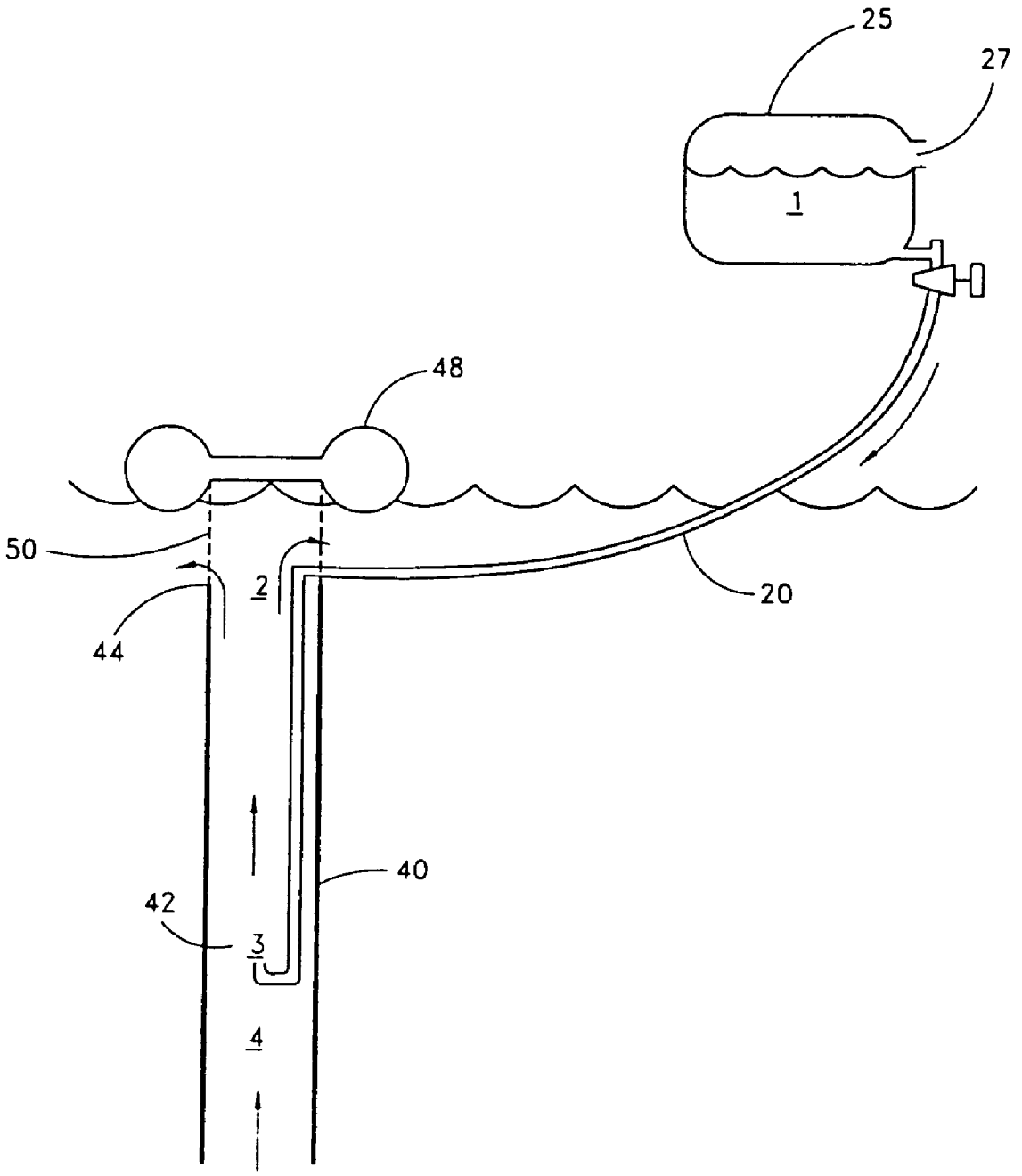

FIG. 2

ClibPDF - www.fastio.com

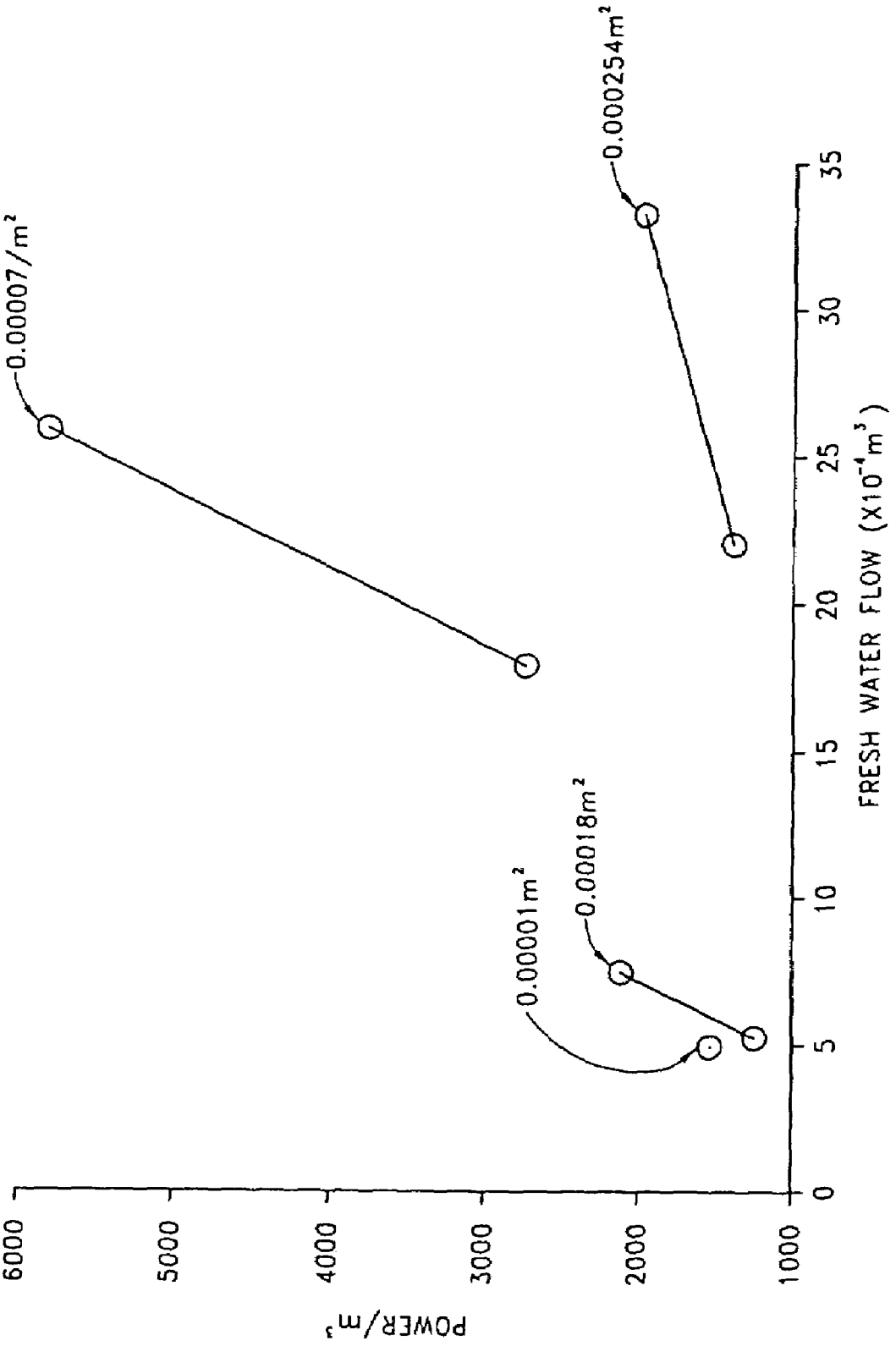

FIG. 3

ClibPDF - www.fastio.com

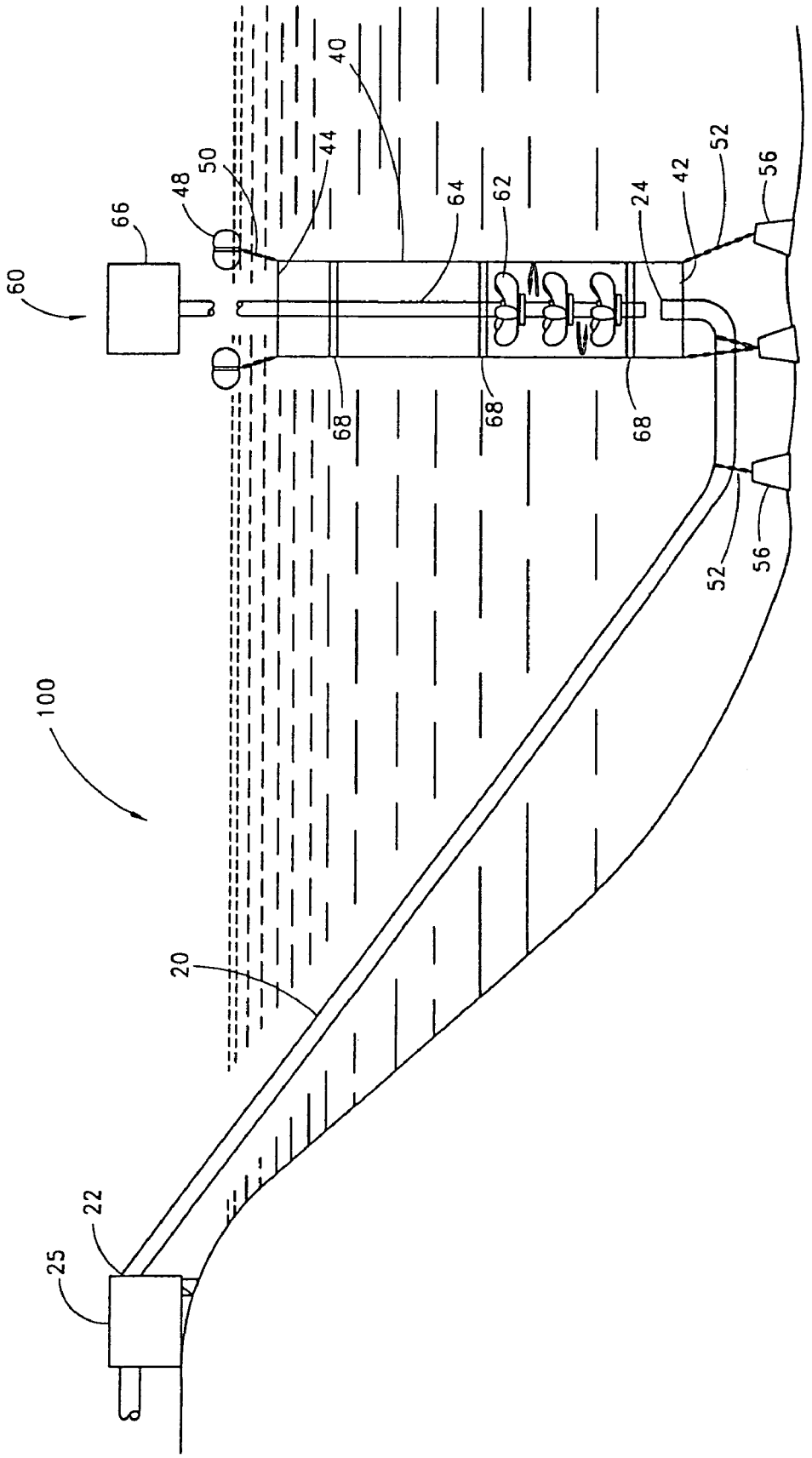

FIG. 4

ClibPDF - www.fastio.com

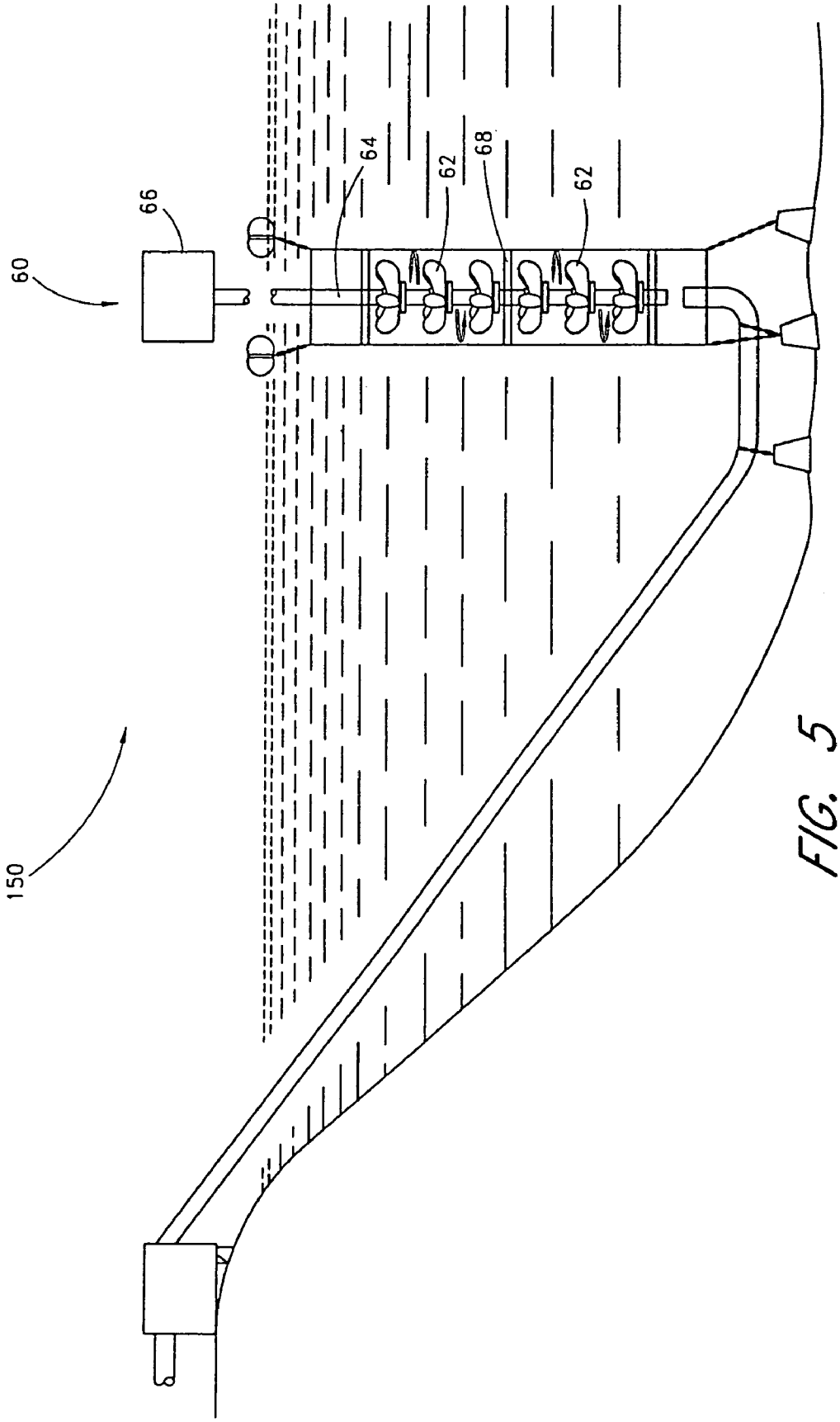

FIG. 5

ClibPDF - www.fastio.com

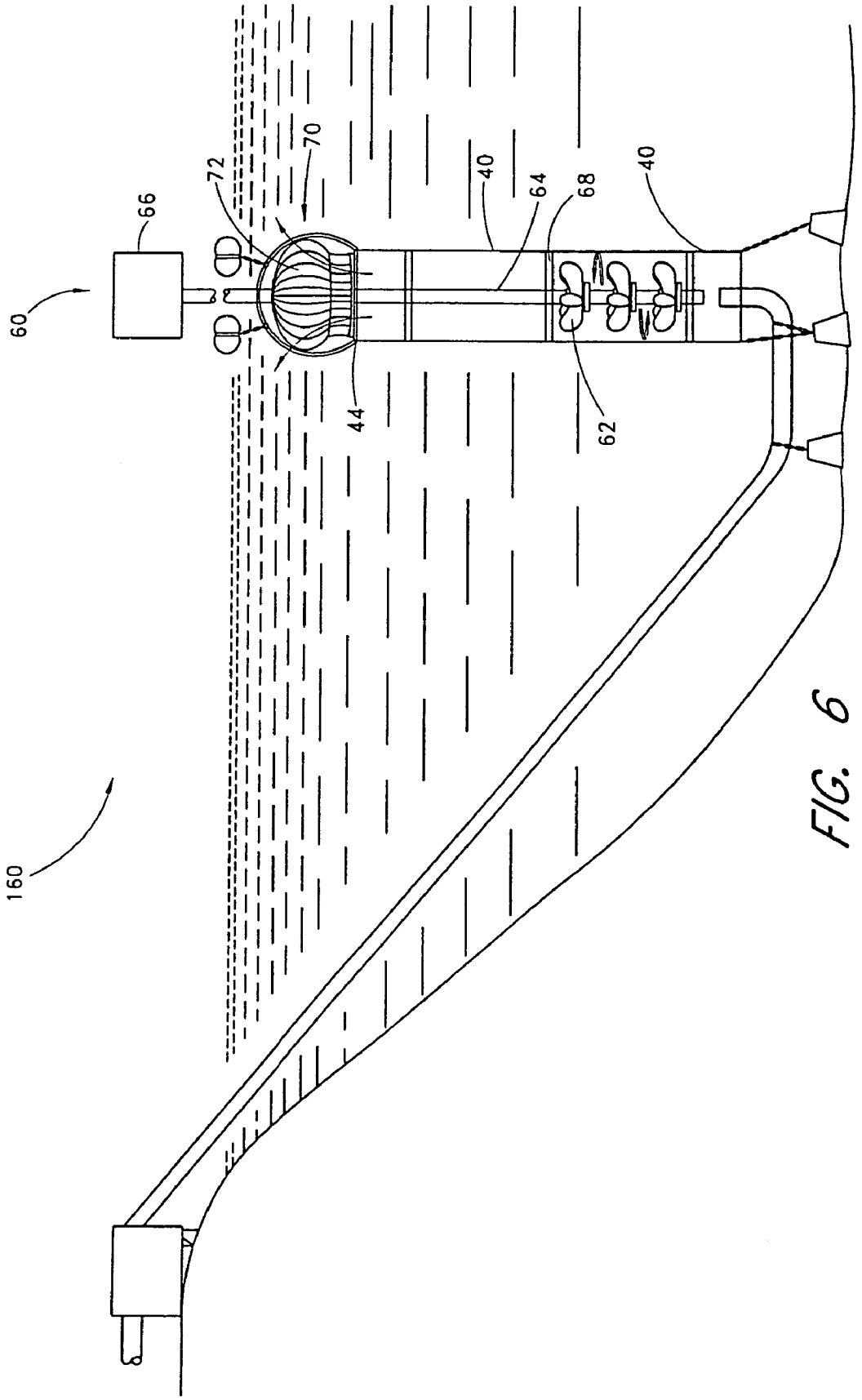

FIG. 6

ClibPDF - www.fastio.com

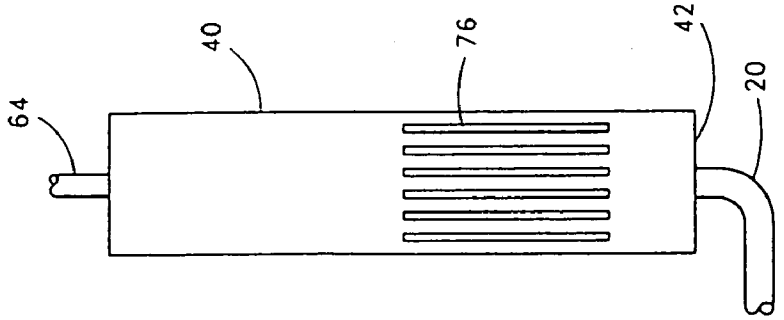

FIG. 7B

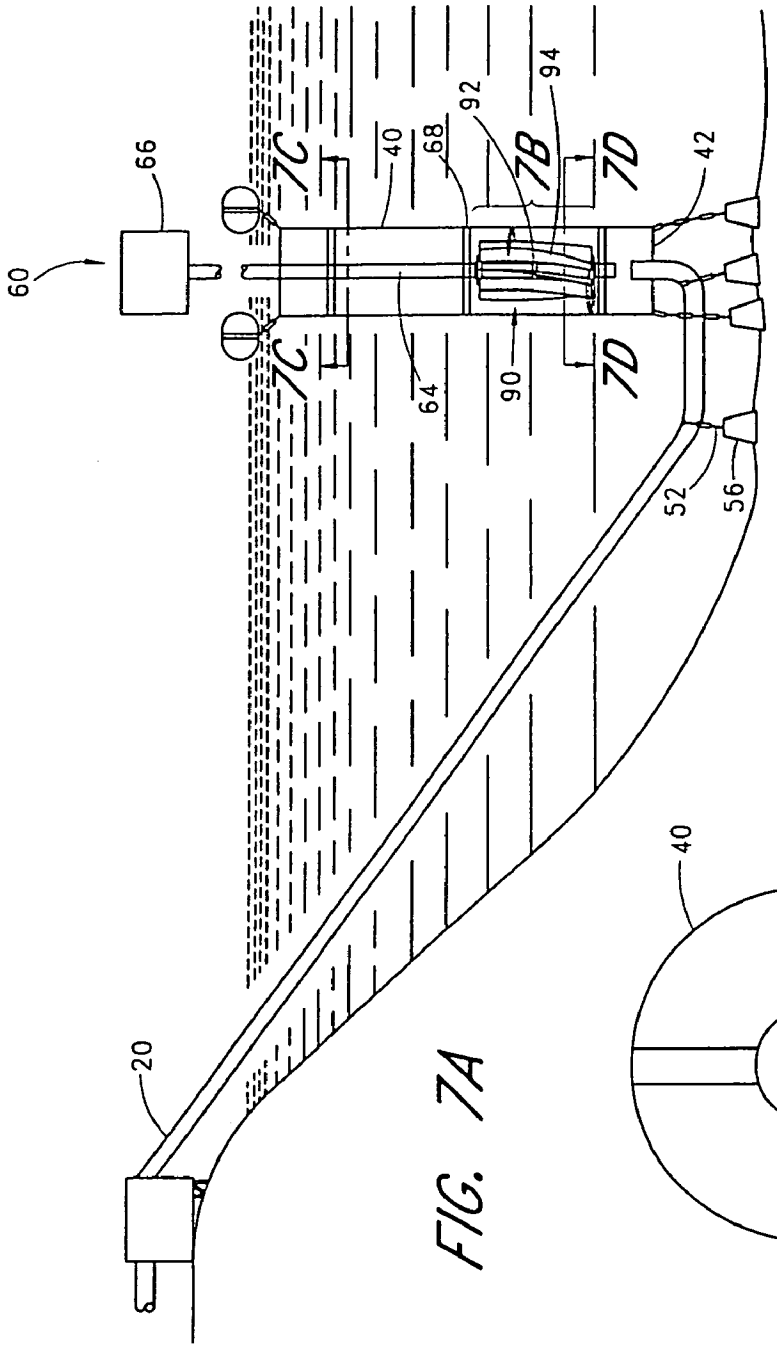

FIG. 7A

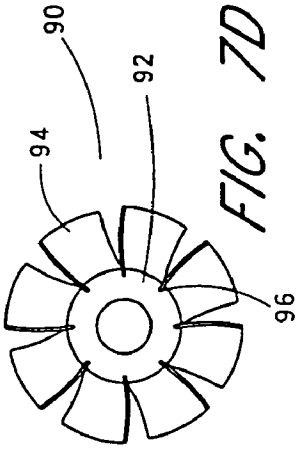

FIG. 7D

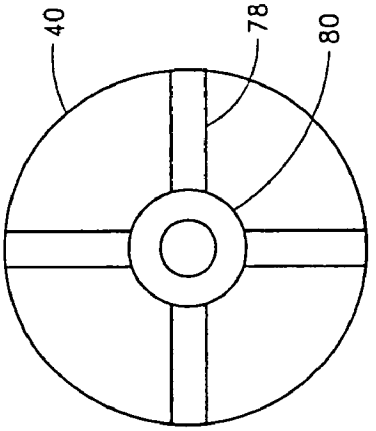

FIG. 7C

ClibPDF - www.fastio.com

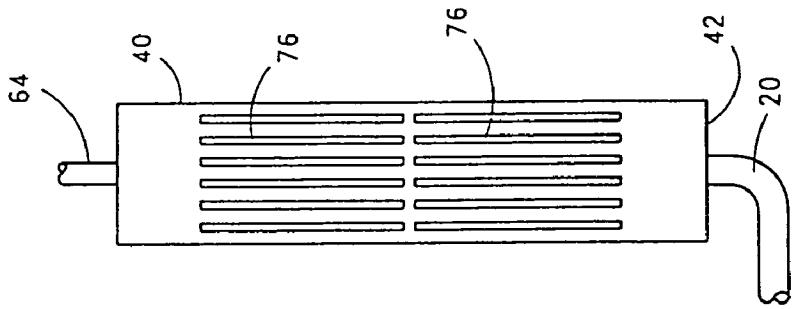

FIG. 8B

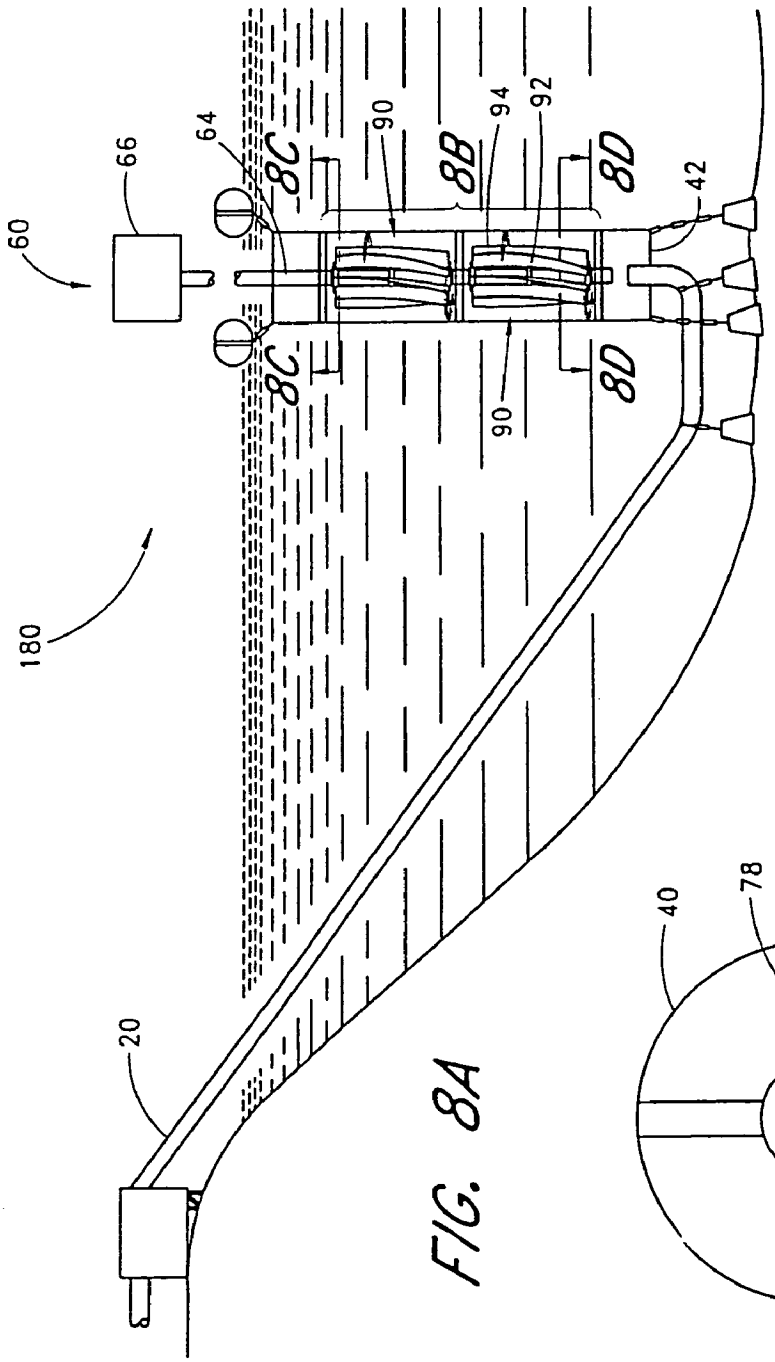

FIG. 8A

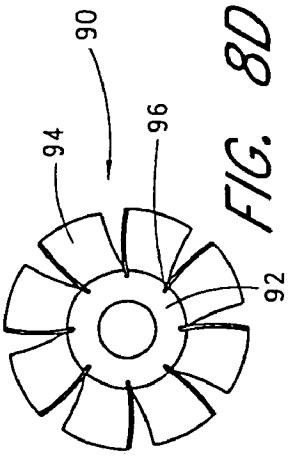

FIG. 8D

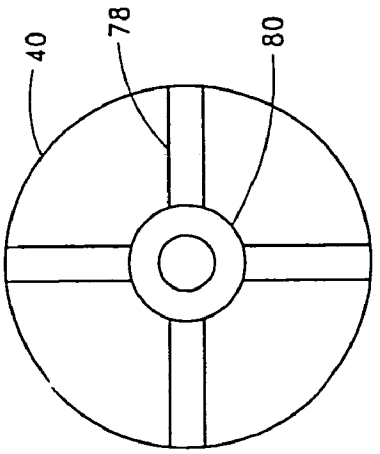

FIG. 8C

ClibPDF - www.fastio.com

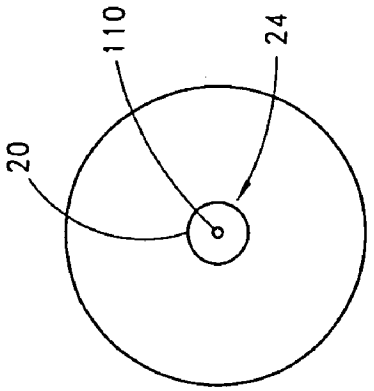

FIG. 9B

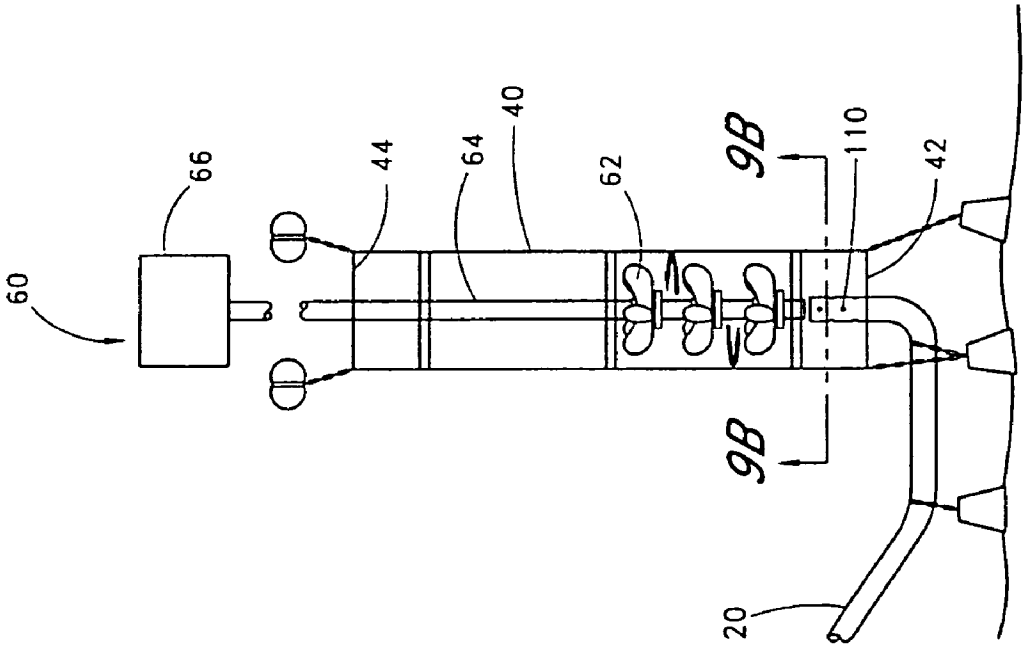

FIG. 9A

ClibPDF - www.fastio.com

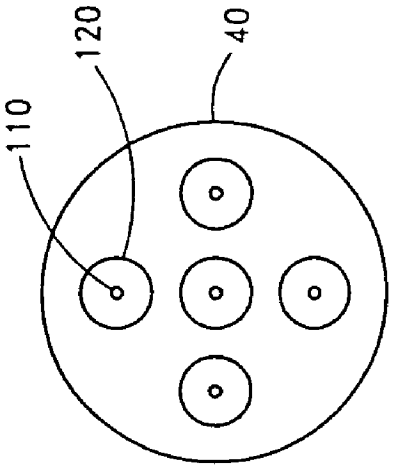

FIG. 10B

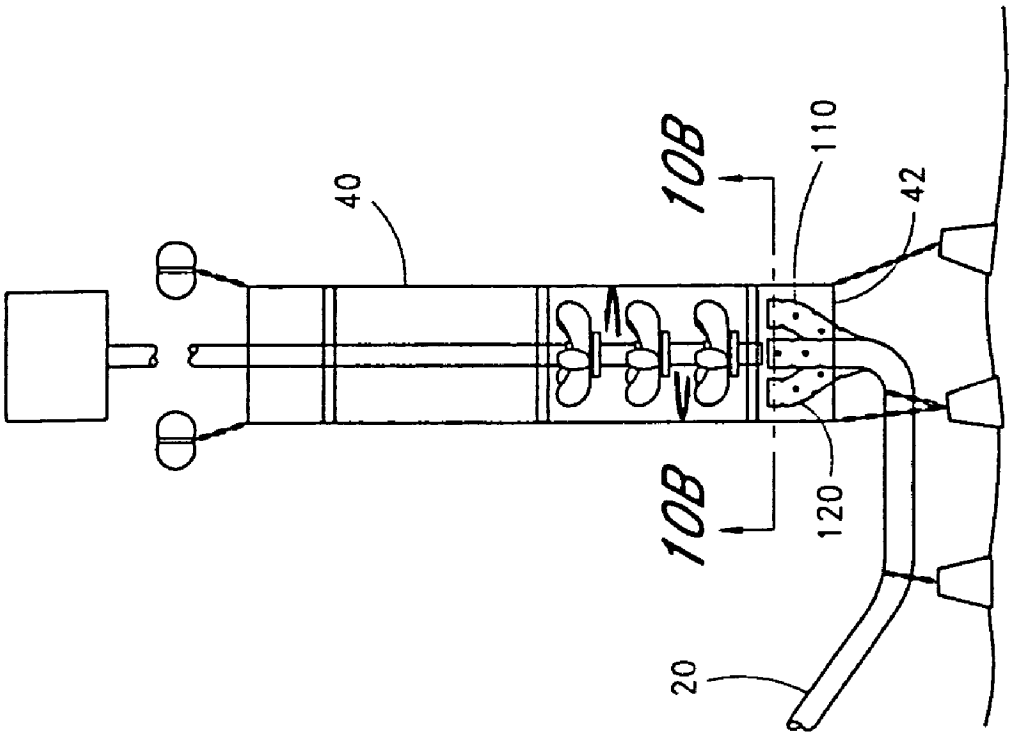

FIG. 10A

ClibPDF - www.fastio.com

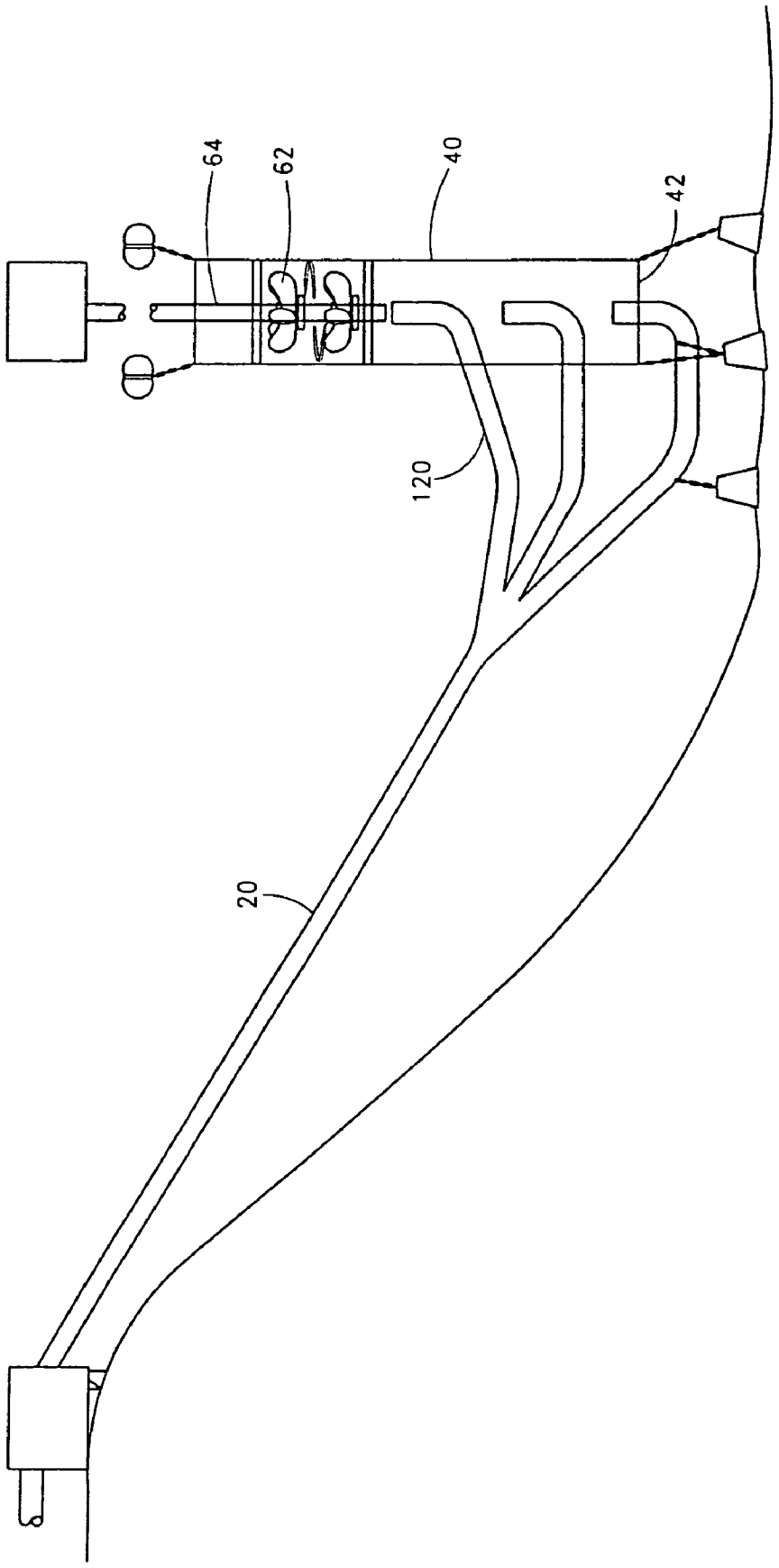

FIG. 11

ClibPDF - www.fastio.com

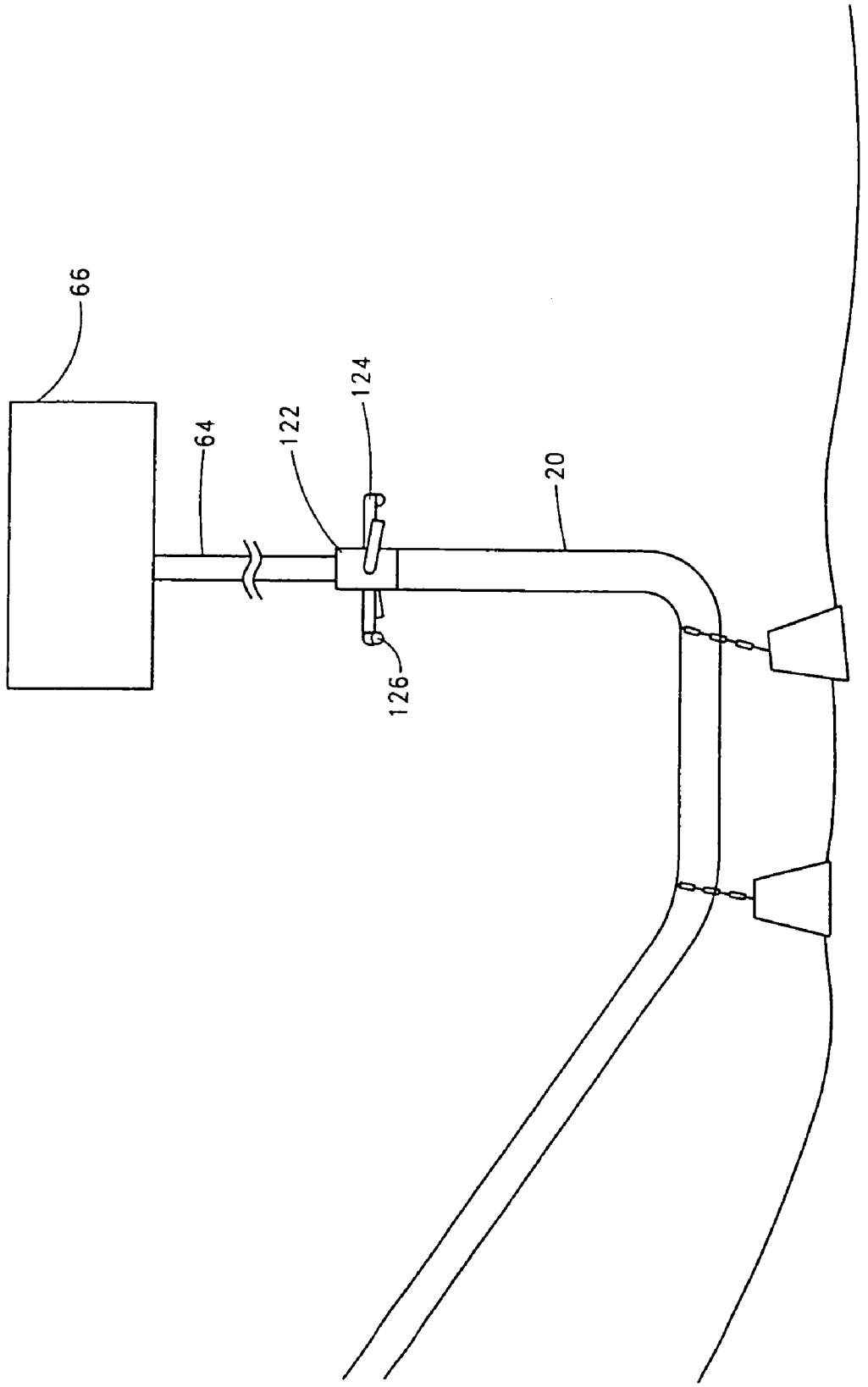

FIG. 12

ClibPDF - www.fastio.com

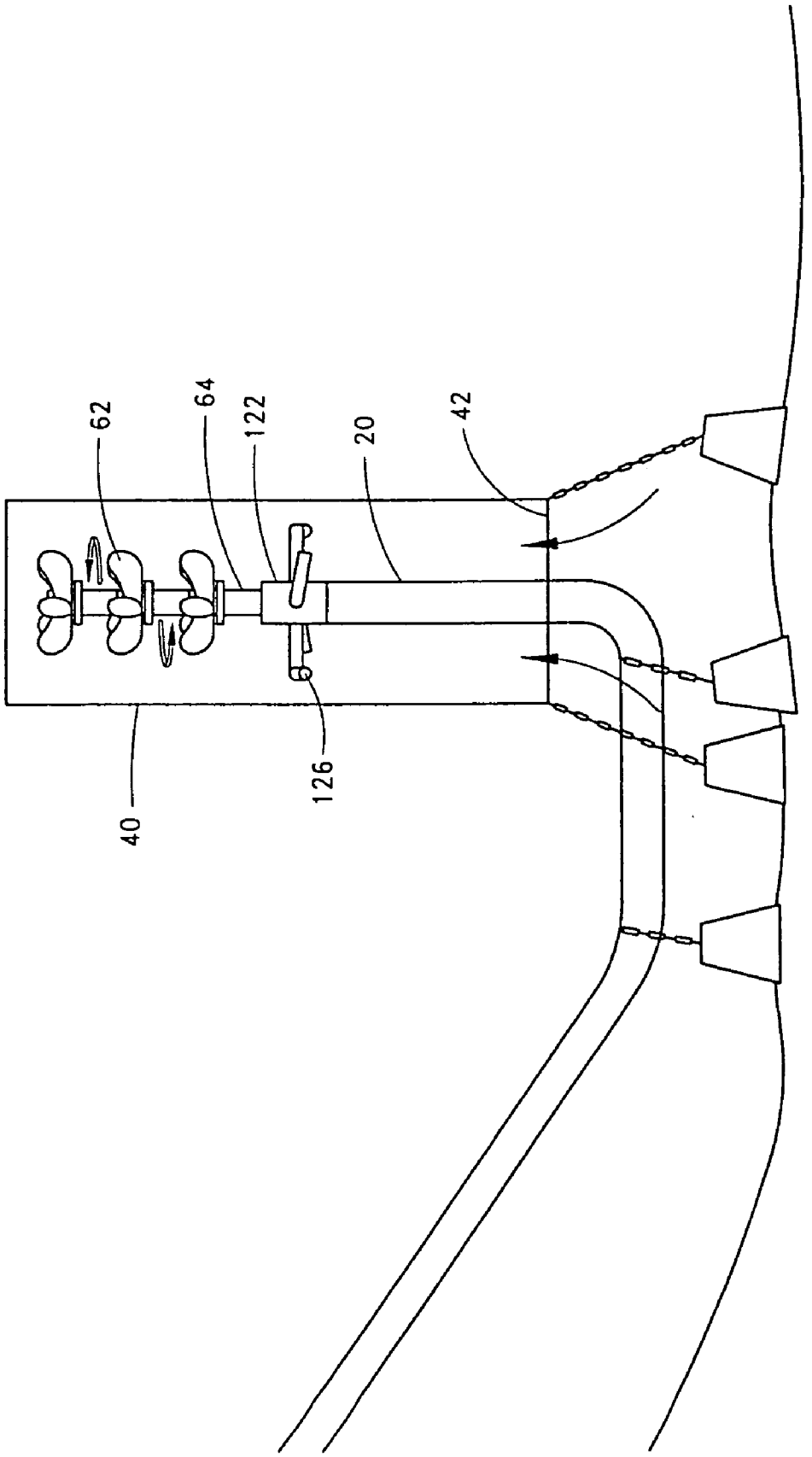

FIG. 13

ClibPDF - www.fastio.com

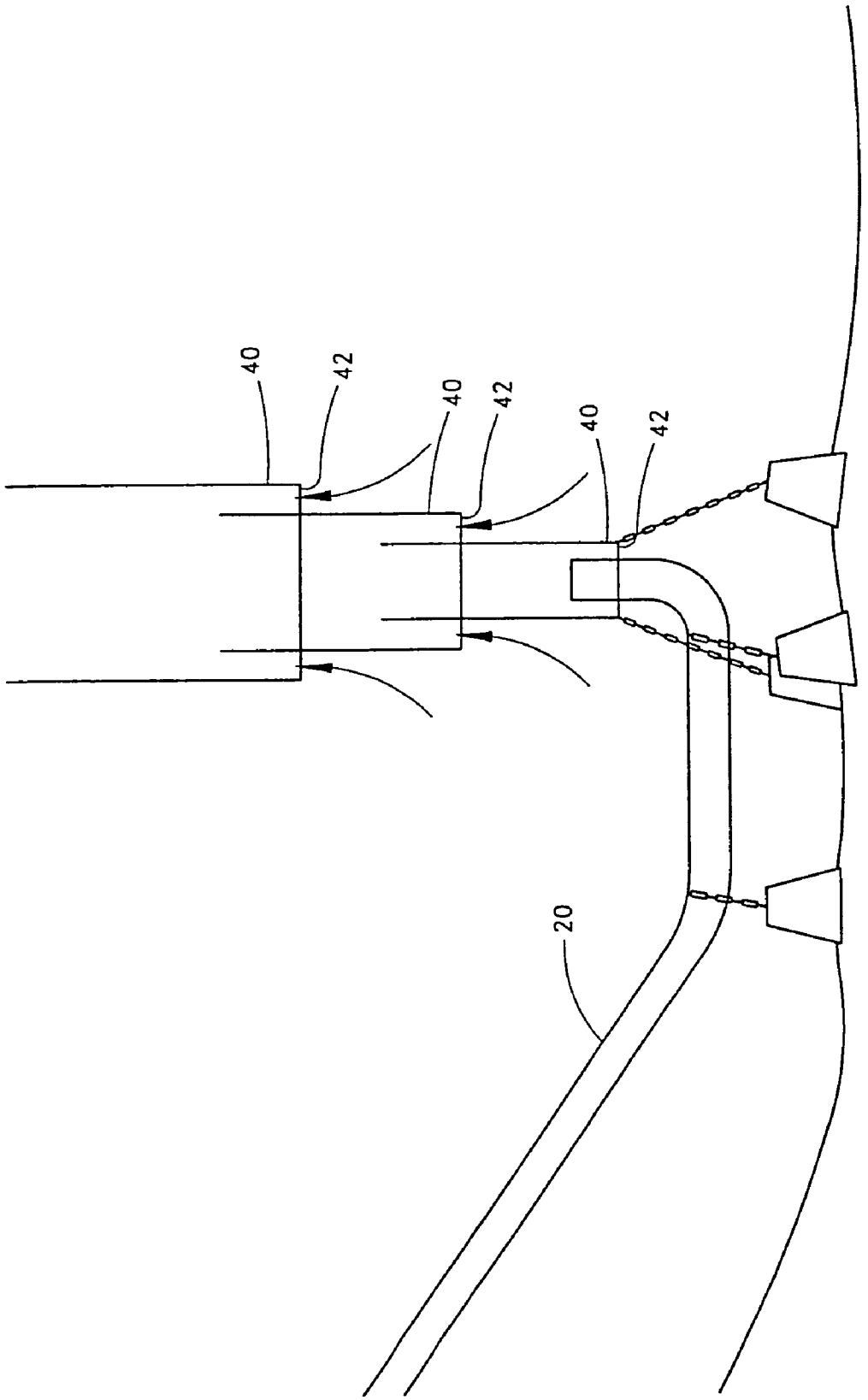

FIG. 14

ClibPDF - www.fastio.com

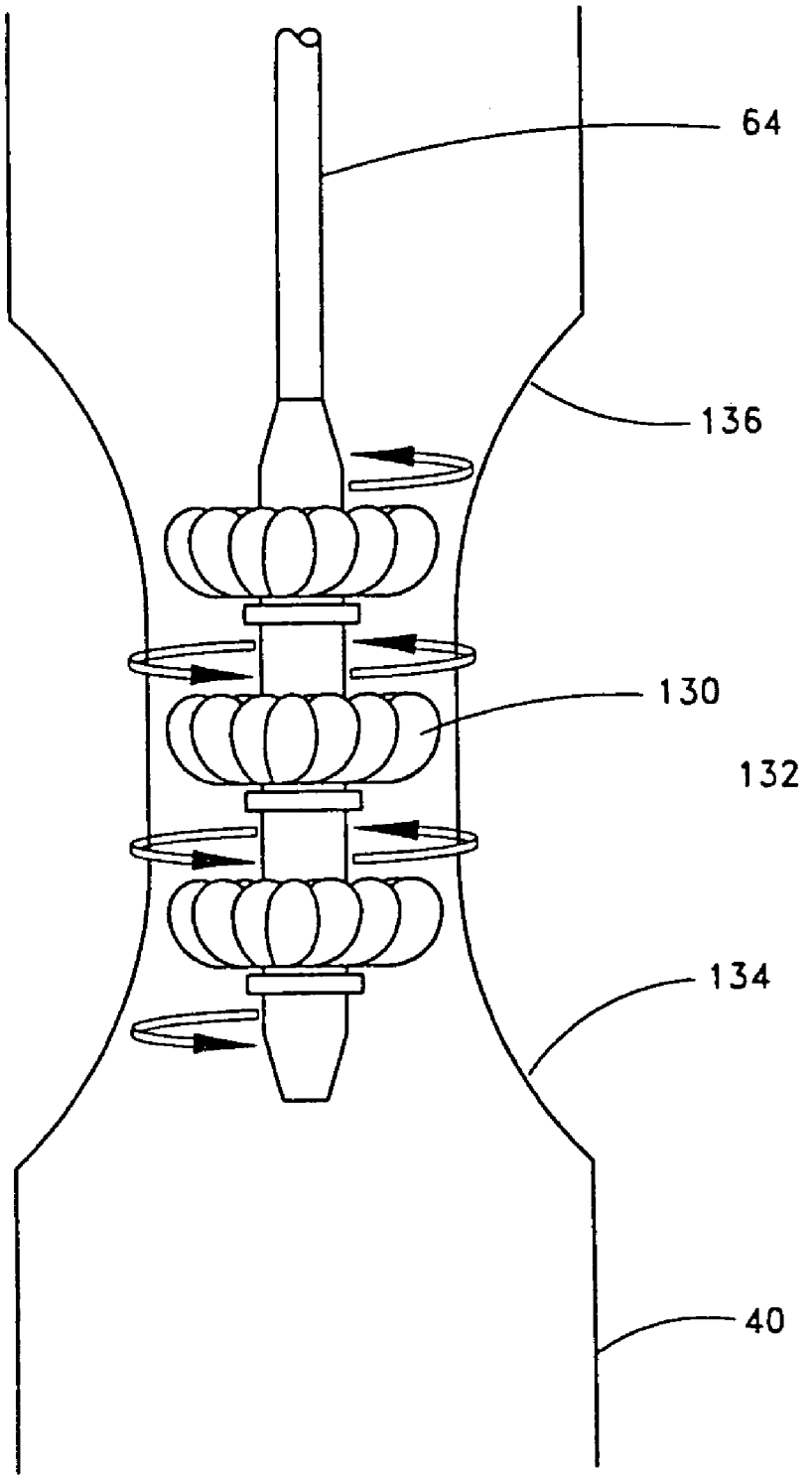

FIG. 15

ClibPDF - www.fastio.com

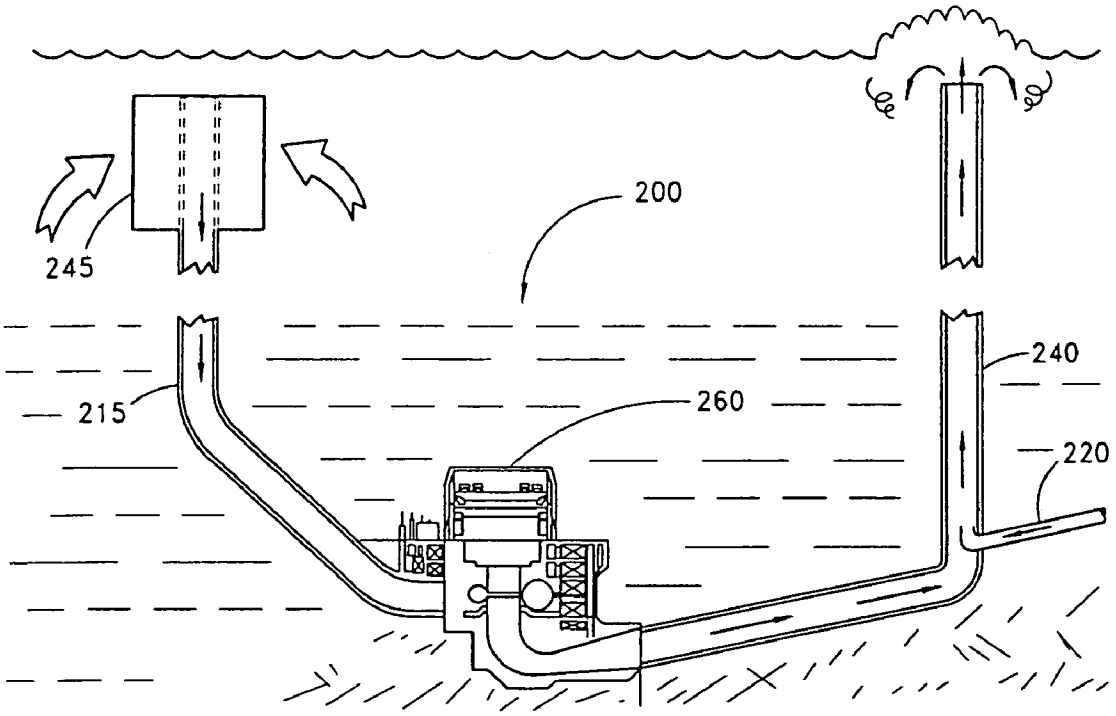

FIG. 16

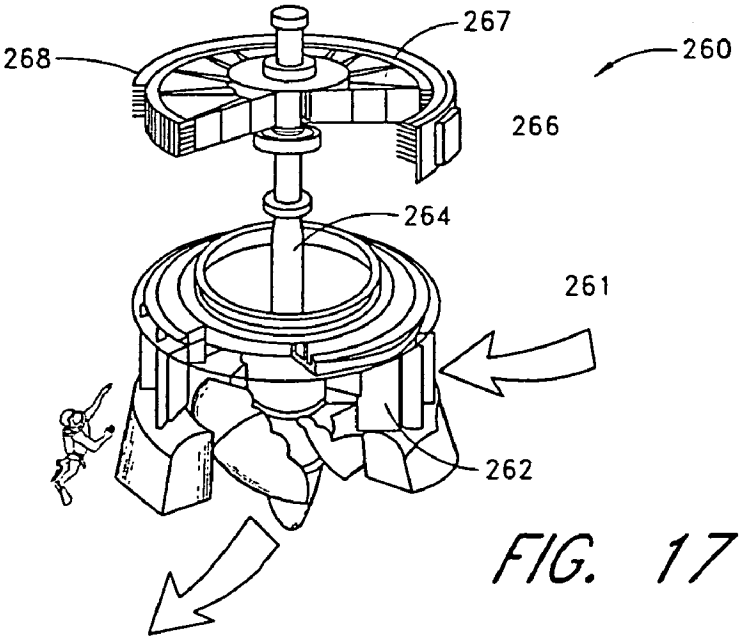

FIG. 17

ClibPDF - www.fastio.com

FIG. 18

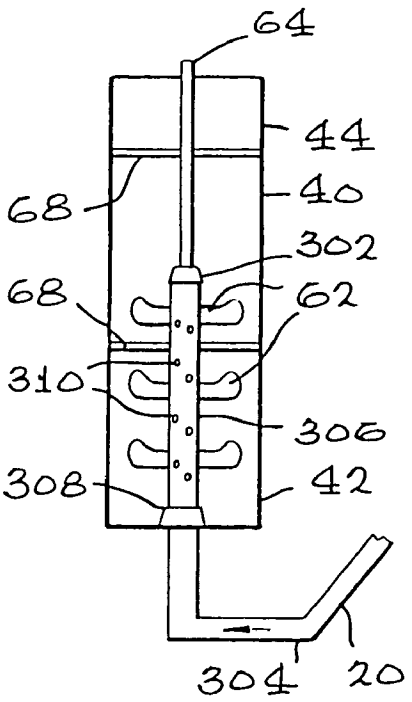

FIG. 19A

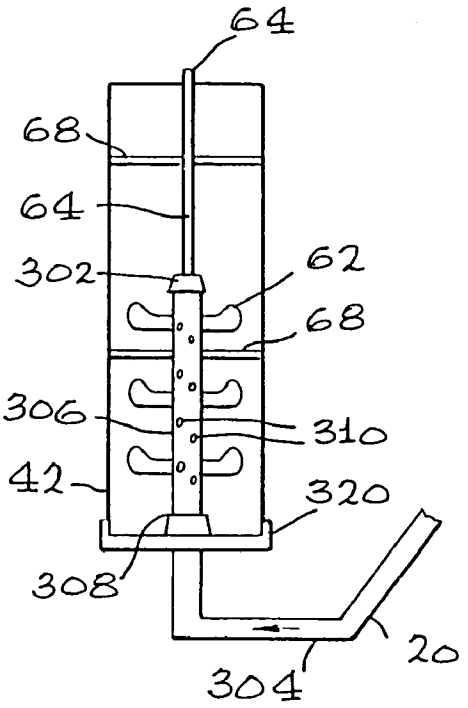

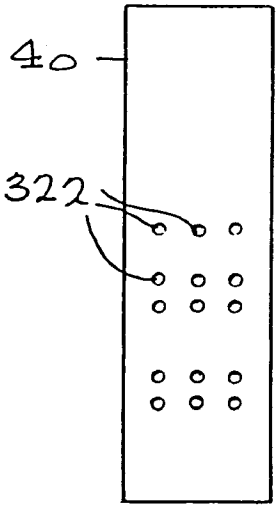

FIG. 19B

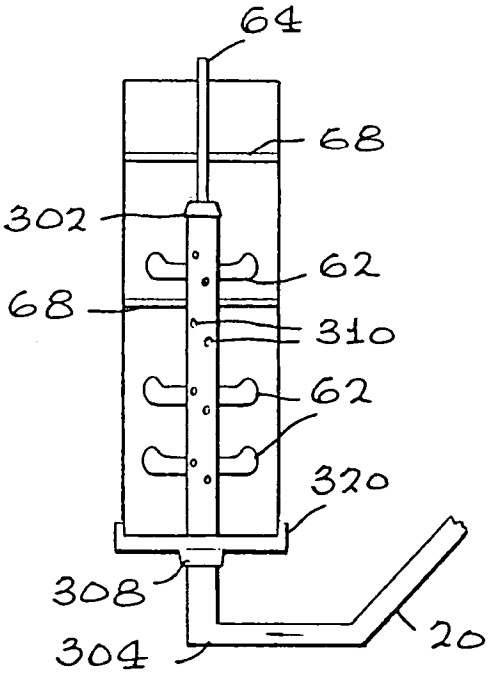

FIG. 20

ClibPDF - www.fastio.com

FIG. 21

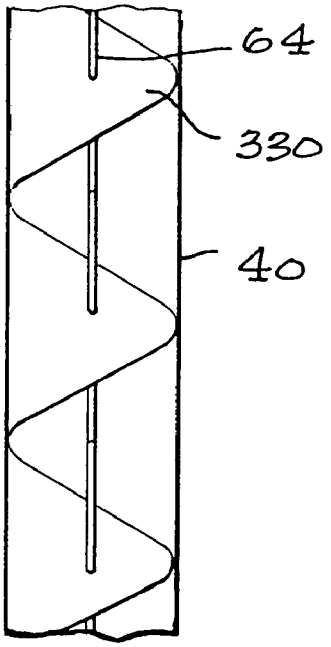

FIG. 22A

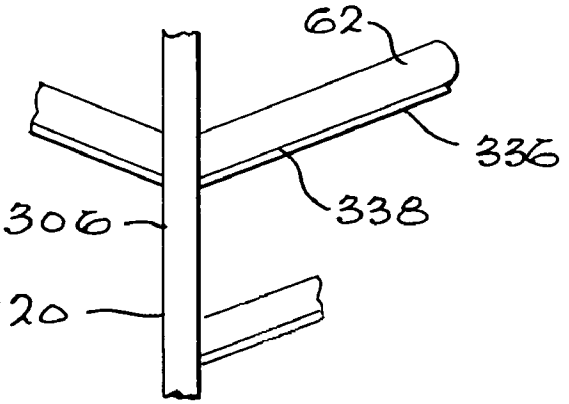

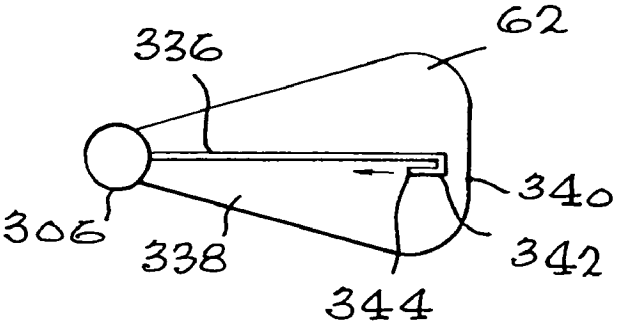

FIG. 22B

ClibPDF - www.fastio.com

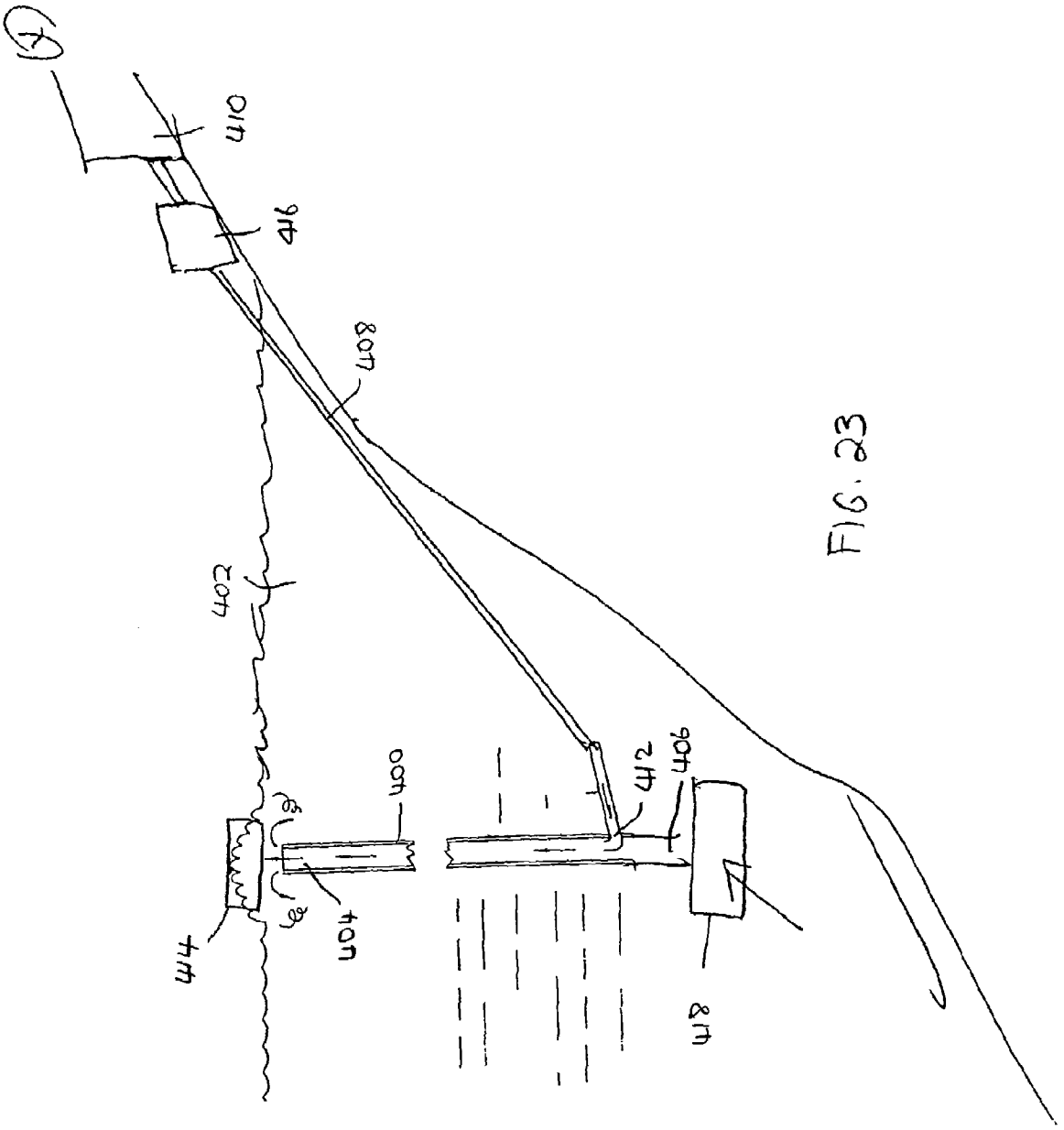

FIG. 23

ClibPDF - www.fastio.com

FIG. 24b

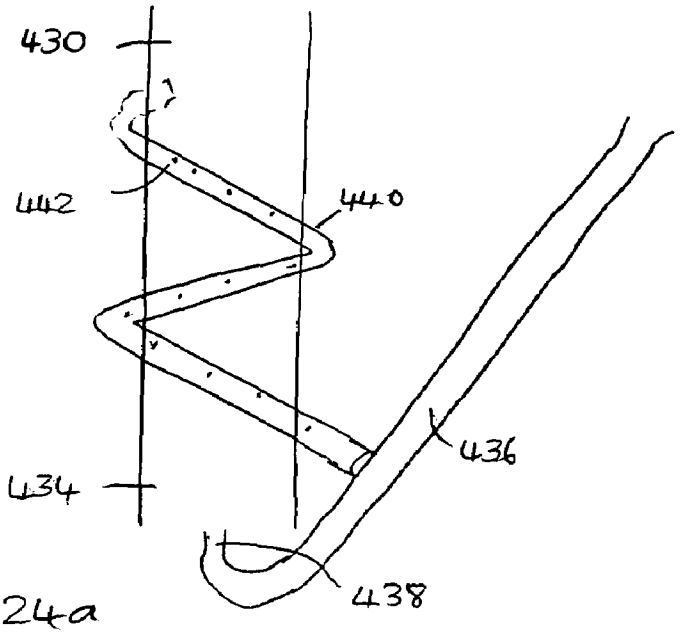

FIG. 24a

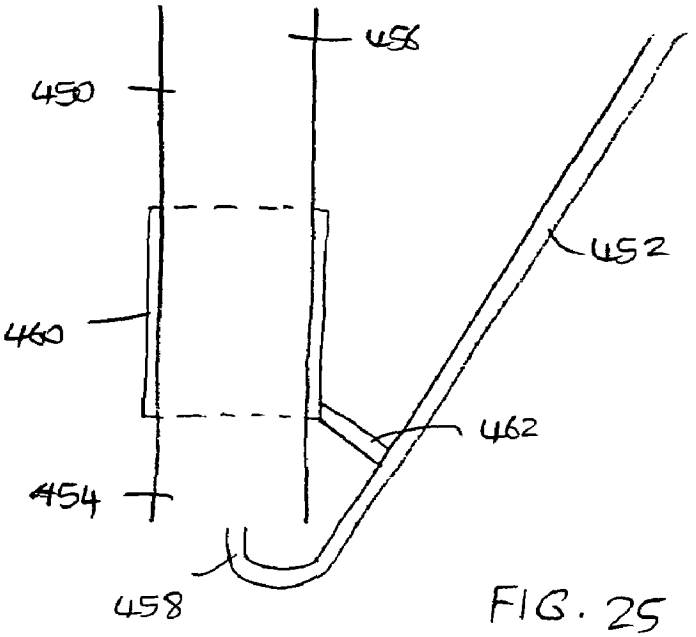

FIG. 25

ClibPDF - www.fastio.com

FIG. 26

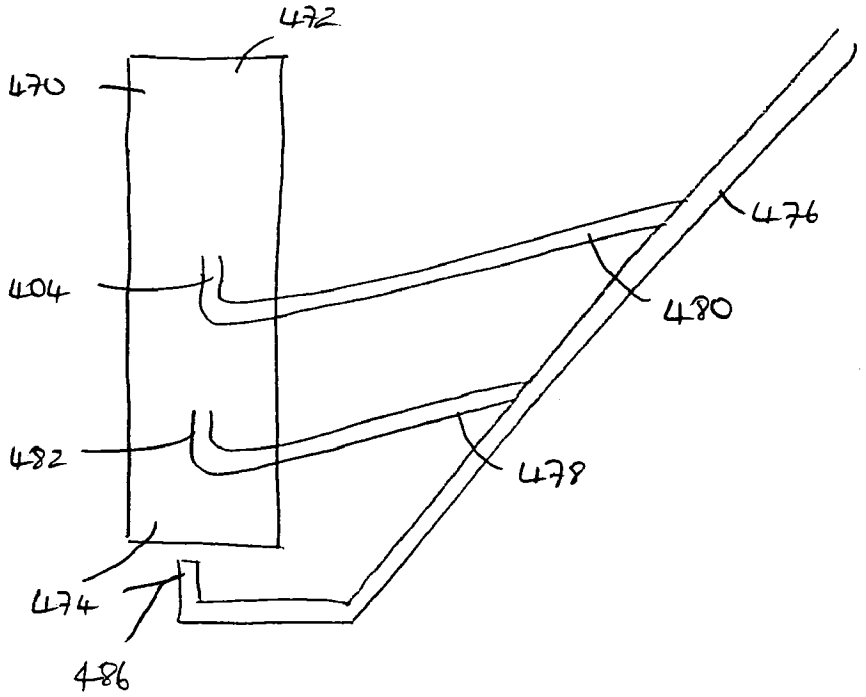

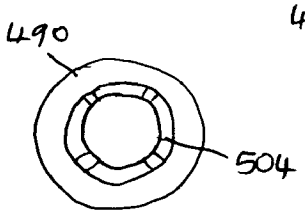

FIG. 27b

FIG. 27a

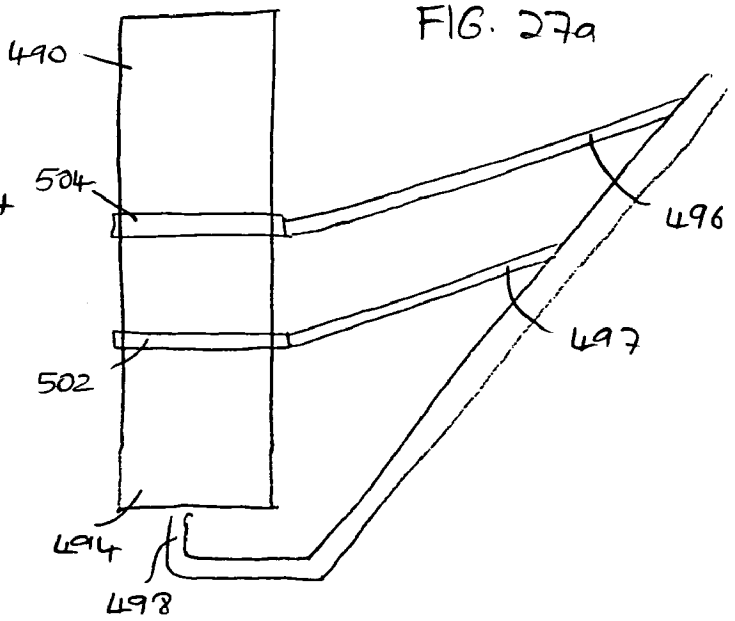

ClibPDF - www.fastio.com

FIG. 28

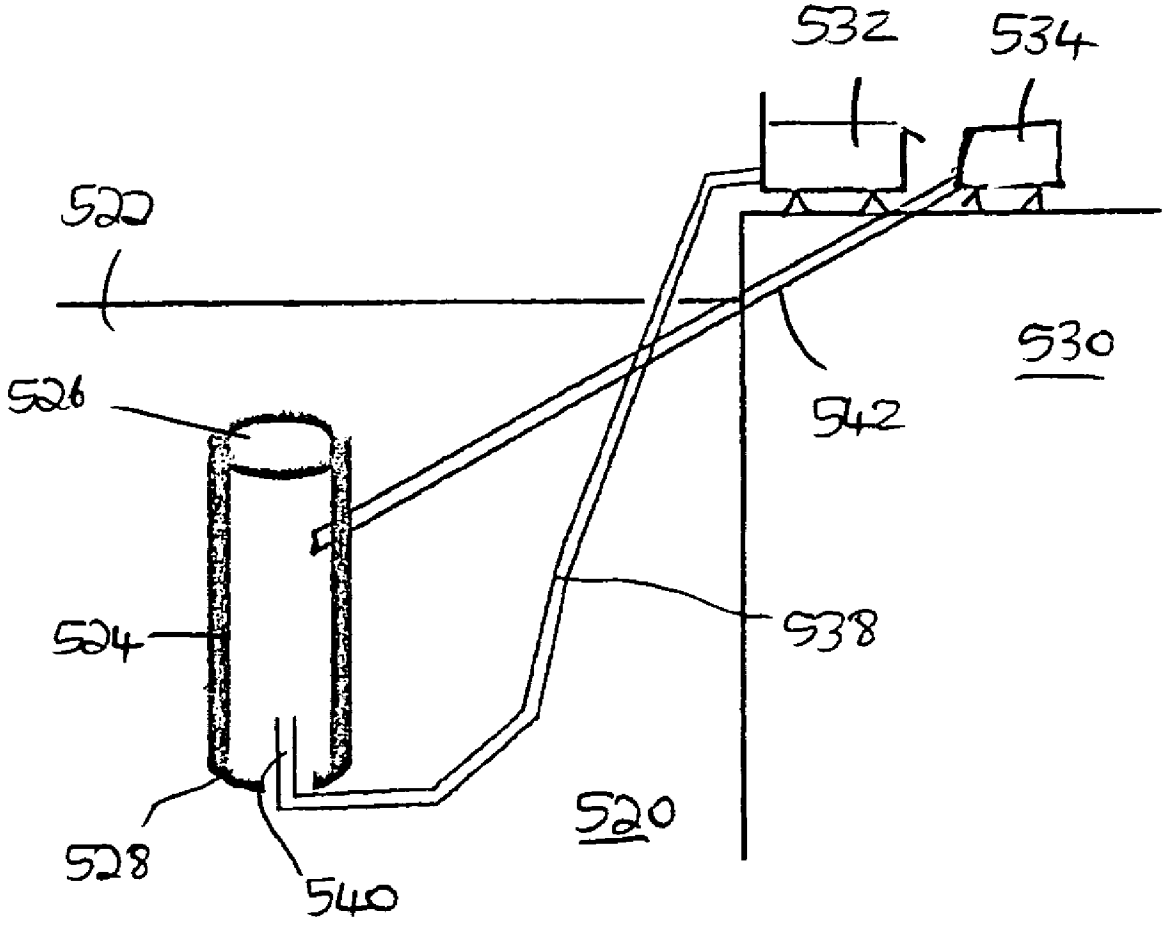

ClibPDF - www.fastio.com

HYDROCRATIC GENERATOR

CROSS REFERENCE TO RELATED APPLICATIONS

This application is a continuation-in-part application of U.S. patent application Ser. No. 10/357,007 filed Feb. 3, 2003 and also a continuation-in-part of U.S. patent application Ser. No. 10/404,488 filed Mar. 31, 2003 now abandoned U.S. patent application Ser. No. 10/357,007 is continuation-in-part of, and U.S. patent application Ser. No. 10/404,488 is a continuation of, U.S. patent application Ser. No. 09/952,564 filed Sep. 12, 2001, now U.S. Pat. No. 6,559,554, which is a continuation-in-part of U.S. patent application Ser. No. 09/415,170 filed Oct. 8, 1999, now U.S. Pat. No. 6,313,545. U.S. patent application Ser. No. 09/415,170 itself claims the benefit of Provisional Patent Applications Nos. 60/123,596 filed Mar. 10, 1999 and 60/141,349 filed Jun. 28, 1999. All of the above applications are incorporated herein by reference.

BACKGROUND OF THE INVENTION

1. Field of the Invention

The present invention relates to hydraulic power generation systems and, in particular, to an apparatus and method for generating power using a novel pseudo-osmosis process which efficiently exploits the osmotic energy potential between two bodies of water having different salinity concentrations.

2. Description of the Related Art

About 20% of the world's electricity is generated using hydropower. In the United States alone this resource accounts for about 12% of the nation's supply of electricity, producing more than 90,000 megawatts of electricity annually and meeting the needs of approximately 28.3 million consumers each year. Hydropower is a clean source of natural energy. Not only is it environmentally friendly (and even beneficial in terms of flood control, etc.), but it is also extremely cost-efficient. In the Northwest, for example, electricity from hydropower plants typically costs about $10 per megawatt hour to produce. This compares to about $60, $45 and $25 per megawatt hour to produce electricity at nuclear, coal and natural gas power plants, respectively.

However, current hydroelectric power plants are configured to recover only the energy component of water that is released as a result of elevational changes. In particular, hydroelectric power is typically generated by dropping 200–300 feet-head (61–91 m-head) of fresh water from a higher elevation to a lower elevation across a rotating turbine coupled to an electrical generator. The exhaust water flow is discharged at the lower elevation as energy-depleted fresh water run-off. But, as will be explained in more detail below, this fresh water run-off is not completely depleted of energy. In fact, the amount of remaining recoverable energy in the discharged fresh water can be as great as the equivalent of 950 feet-head (290 m-head) of water or more. To understand the nature and origin of this additional recoverable energy component it is helpful to look at how fresh water is created.

Fresh water begins as water vapor that is evaporated from the oceans by solar energy. This water vapor rises into the atmosphere whereupon it cools. Cooling causes the water vapors to condense into clouds, ultimately resulting in precipitation. Some of this precipitation occurs over land masses forming fresh-water lakes, accumulated snow-fall and an extensive network of associated rivers, streams,

aquifers and other forms of water run-off. Ultimately, all or virtually all of this fresh water run-off makes its way back to the oceans, thus completing the cycle. In fact, throughout the world enormous quantities of fresh water is freely washed into the ocean each year as part of the naturally occurring water cycle and/or as part of various human interventions such as hydro-power facilities, municipal waste water treatment facilities, and the like.

The overall driving force behind the water cycle is solar energy radiating from the sun over millions of square miles of exposed ocean waters each day. It is this solar energy that causes evaporation of fresh water vapors from the relatively high-saline ocean waters. The amount of radiant solar energy absorbed in this process is enormous, representing approximately 2,300 kJ/kg (0.64 kW-hr/kg) of water evaporated. This absorbed energy causes a concomitant increase in the latent energy or enthalpy of the evaporated water. The vast majority of this latent energy (approximately 99%) is dissipated as heat energy into the atmosphere upon re-condensing of the water vapors into clouds. However, a small but significant portion of this latent energy (approximately 0.13%) remains stored within the resulting fresh-water precipitation. This remaining non-dissipated stored energy represents the so-called "free energy of mixing" (or "heat of mixing") of fresh water into sea water. Specifically, it is the additional incremental energy (beyond the energy of evaporation of pure water) that is required to separate the fresh water (or other solvent) from the salt water solution (or other solvent/solute solution).

The free energy of mixing reflects an increase in entropy of water (or other solvent) when it is transformed from its pure (fresh-water) state to its diluted (salt-water) state. It is a physical property of solvents, such as water, that they have a natural tendency to migrate from an area of relatively low solute concentration (lower entropy) to an area of relatively high solute concentration (higher entropy). Thus, an entropy gradient is created whenever two bodies of water or other solvent having differing solute concentrations are brought into contact with one another and begin to mix. This entropy gradient can be physically observed and measured in the well-known phenomena known as osmosis.

Osmosis is the flow of water through a selectively permeable membrane (i.e., permeable to water, but impermeable to dissolved solutes) from a lower concentration of solute to a higher one. It is a colligative phenomenon—that is, it is not dependent on the nature of the solute, only on the total molar concentration of all dissolved species. Pure water is defined as having an osmotic potential of zero. All water-based solutions have varying degrees of negative osmotic potential. Many references discuss osmotic potential in terms of pressure across a semi-permeable membrane since the easiest way to measure the effect is to apply pressure to the side of the membrane with higher negative osmotic potential until the net flow is canceled. "Reverse osmosis" is the phenomena that occurs when additional pressure is applied across a selectively permeable membrane to the point of reversing the natural flow-direction therethrough, resulting in separation of the solvent from the solute.

But, just as it takes energy to separate an amount of fresh water from a body of salt water, such as through solar evaporation or using the well-known reverse-osmosis desalinization process, remixing the fresh water back into the ocean waters results in the release of an equal amount of stored energy (approximately 2.84 kJ/kg) of fresh water. If this source of latent stored energy could somehow be efficiently exploited, it could result in the production of

ClibPDF - www.fastio.com

enormous amounts of inexpensive electrical power from a heretofore untapped and continually renewable energy resource.

For example, if 30% of the average flow from the Columbia River could be diverted into a device that recovered this latent free energy of mixing or osmotic energy potential at 100% efficiency, it would generate 6,300 megawatts of power. To put this in perspective, the current hydroelectric facility of the Grand Coulee Dam on the Columbia River (the largest hydroelectric power plant in the United States and the third largest in the world) generates a peak output of 6,800 megawatts. If the flow from the Weber River into the Great Salt Lake could be diverted through such a device, it would generate 400 megawatts of power. Such a device would be of enormous benefit to people throughout the world, particularly those in remote regions where electrical power generation by conventional means may be difficult or impractical.

Various proposals have been made over the years for possible ways of commercially exploiting this attractive source of natural, renewable energy. For example, Jellinek (U.S. Pat. No. 3,978,344) proposed to pass fresh water through a semi-permeable membrane into a salt or brine solution. The resulting osmotic pressure differential across the membrane would then be used to eject a stream of salt water through an outlet orifice to drive a water wheel coupled to an electrical power generator to generate electrical power. Similarly, Loeb (U.S. Pat. No. 3,906,250) describes a method and apparatus for generating power utilizing pressure retarded osmosis through a semi-permeable membrane.

Each of the above approaches, like many others heretofore advocated, rely on a forward osmosis process utilizing a semi-permeable membrane to obtain useful work from the difference in osmotic potential exerted across the membrane. While such systems may have useful application on a small scale under certain limited conditions, full-scale commercial development and exploitation of such power-generation systems is hampered by the large membrane surface area required to achieve adequate flow rates and the expense and difficulty of maintaining such semi-permeable membranes. Although modern advances in synthetic materials have produced membranes that are very efficient at rejecting brine solutes and are tough enough to withstand high pressures, such membranes are still susceptible to clogging, scaling and general degradation over time. For example, river water used as a fresh-water source would likely carry a variety of solutes and other suspended sediment or contaminants which could easily clog the membrane, requiring filtering and/or periodic cleaning. Treated effluent from a municipal waste-water treatment plant used as a fresh water source would present similar and possibly additional complications, making such approach commercially impractical.

Urry (U.S. Pat. No. 5,255,518) proposed an alternative method and apparatus for exploiting osmotic energy potential in a manner that does not utilize a semi-permeable membrane. In particular, Urry proposed the use of a specially formulated bio-elastomer. The bio-elastomer is selected such that it alternately and reversibly contracts or expands when exposed to different concentrations of a brine solution. A mechanical engine is proposed for converting the expansion and contraction motion of individual bio-elastomer elements into useful work. While such a system demonstrates the usefulness of the general approach, the proposed system utilizing bio-elastomer elements or the like is not readily suited for large-scale, low cost energy production. To produce useful energy on a commercial scale such a system would require a vast number of bio-elastic elements having very large surface area. Again, the exposed surface area would be subject to contamination and degradation over time, as with the membranes discussed above, making such a system prohibitively expensive to construct and maintain.

Assaf (U.S. Pat. No. 4,617,800) proposed another alternative apparatus for producing energy from concentrated brine in a manner that does not utilize a semi-permeable membrane or specially formulated bio-elastomer. In particular, Assaf proposed using a system of steam evaporation and re-condensation. In this approach steam is first generated by heating fresh water in an evaporator and passing the steam through a turbine to drive an electric generator. The condensed steam is then passed to a condenser wherein it is contacted with a flow of concentrated brine, generating heat from the heat of dilution of the brine. It is proposed that the evolved heat would then be transmitted though a heat-exchanger element back to the evaporator to generate steam from the fresh water. While this approach generally avoids the membrane and large surface area contamination problems discussed above, it is not ideally suited for large-scale, low cost energy production. This is because of the number and complexity of components involved and the need to heat and cool the fresh water in pressure sealed evaporator and condenser units. Such a system would be expensive to construct and operate on a commercial scale.

Thus, there remains a need for a method and apparatus for efficiently exploiting the osmotic energy potential between fresh water and sea water (and/or other solutions).

SUMMARY OF THE INVENTION

Accordingly, it is an aspect to provide an improved apparatus and method for generating power using a novel forward osmosis process which efficiently exploits the osmotic energy potential between two bodies of water having different salinity concentrations.

Advantageously, the method and apparatus of the present invention does not require the use of a semi-permeable membrane or other specially formulated material, nor does it require heating or cooling of the fresh water or salt water solution. Moreover, the present invention may recover energy from a wide variety of fresh water sources, including treated or untreated river run-off, treated waste-water run-off or effluent, storm-drain run-off, partly contaminated fresh water run-off, and a wide variety of other fresh water sources. Thus, the present invention is well suited to large scale power production in a wide variety of geographic locations and under a wide variety of conditions. The invention has particular advantage for use in remote regions where electrical power generation by conventional means may be commercially infeasible or impractical.

In accordance with one embodiment the present invention provides a method for generating power from the differences in osmotic potential between a source of relatively low salinity water or other fluid and a source of relatively high salinity water or other fluid. Relatively low salinity water is conducted through a first tube. The relatively low salinity water is then directly contacted with the relatively high salinity water in an enclosed second tube to form a mixture. The second tube is in fluid communication with the source of relatively high salinity water through one or more openings. The contacting of the two different salinity waters causes upwelling of the mixture within the second tube. This mixture is passed through a power generation unit to generate mechanical and/or electrical power.

ClibPDF - www.fastio.com

In accordance with another embodiment the present invention provides a method for generating power from the osmotic energy potential of fresh water. A source of relatively low salinity water is conducted to a predetermined depth in a body of relatively high salinity water through a down tube having a first cross-sectional area. The relatively low salinity water is directly contacted with the relatively high salinity water from the predetermined depth in an up tube having a second cross-sectional area, forming a mixture. The mixture is allowed to upwell within the up tube upward to a depth less than the predetermined depth. The upwelling mixture is passed through a power generation unit to generate useful power.

In accordance with another embodiment the present invention provides a system for generating power from differences in osmotic potential between a source of relatively low salinity water and a source of relatively high salinity water. The system comprises an up tube located in the source of relatively high salinity water. The up tube is fluidly connected to the source of relatively high salinity water through one or more openings in the up tube at a first depth. The up tube terminates at a depth in the source of relatively high salinity water at a second depth less than the first depth. A down tube is provided having a first end connected to the source of relatively low salinity water and a second end which discharges the low salinity water from the source of relatively low salinity water into the up tube such that the relatively low salinity water and the relatively high salinity water form a mixture which upwells within the up tube. A means is provided for generating power from the rising mixture.

In accordance with another embodiment, the present invention provides a system for generating power from differences in osmotic potential between a source of relatively low salinity water or other fluid and a source of relatively high salinity water or other fluid. The system comprises a first tube for conducting a flow of relatively high salinity water from a first depth to a second depth, the first tube having a first cross-sectional area. A second tube is provided fluidly connected to the source of relatively low salinity water at a first end and to the first tube at a second end at or near the first depth, where the second tube has a second cross-sectional area. A third tube is provided for conducting a flow of relatively high salinity water from the second depth at or near a first end of the third tube to the first tube at the second end, where the relatively low salinity water and the high salinity water form a mixture in the first tube. The mixture is caused to flow in the first tube, increasing the recoverable energy of the relatively high salinity water in the third tube. A power generator is provided, disposed between the first and third tubes for generating power from the increase in recoverable energy.

In accordance with another embodiment, the present invention provides a method for generating power from the difference in osmotic potential between a source of relatively low salinity water or other fluid and a source of relatively high salinity water or other fluid. A source of relatively low salinity water is conducted through a first tube, where the first tube has a first cross-sectional area. The relatively low salinity water is directly contacted with water from the source of relatively high salinity in an enclosed second tube to form a mixture, where the second tube has a second cross-sectional area. The second tube is in fluid communication with the source of relatively high salinity water through one or more openings in a third tube. The contacting causes an increase in recoverable energy of the relatively low salinity water in the first tube. The relatively high salinity water in the third tube is conducted through a power generation unit to generate mechanical and/or electrical power.

For purposes of summarizing the invention and the advantages achieved over the prior art, certain objects and advantages of the invention have been described herein above. Of course, it is to be understood that not necessarily all such objects or advantages may be achieved in accordance with any particular embodiment of the invention. Thus, for example, those skilled in the art will recognize that the invention may be embodied or carried out in a manner that achieves or optimizes one advantage or group of advantages as taught herein without necessarily achieving other objects or advantages as may be taught or suggested herein.

All of these embodiments are intended to be within the scope of the invention herein disclosed. These and other embodiments of the present invention will become readily apparent to those skilled in the art from the following detailed description of the preferred embodiments having reference to the attached figures, the invention not being limited to any particular preferred embodiment(s) disclosed.

BRIEF DESCRIPTION OF THE DRAWINGS

Having thus summarized the general nature of the invention and its essential features and advantages, certain preferred embodiments and modifications thereof will become apparent to those skilled in the art from the detailed description herein having reference to the figures that follow, of which:

FIG. **1**A is a schematic diagram representation of a conventional forward osmosis process through a semi-permeable membrane;

FIG. **1**B is a schematic diagram representation of a conventional reverse osmosis process through a semi-permeable membrane;

FIG. **2** is a schematic representation of an experimental up tube upwelling apparatus for use in accordance with the present invention;

FIG. **3** is a graph of theoretical power recovery for different sized down-tubes and fresh water flow rates using the experimental upwelling device of FIG. **2**;

FIG. **4** is a schematic representation of one embodiment of a hydrocratic generator having features and advantages in accordance with the present invention;

FIG. **5** is a schematic representation of an alternative embodiment of a hydrocratic generator having features and advantages in accordance with the present invention;

FIG. **6** is a schematic representation of a further alternative embodiment of a hydrocratic generator having features and advantages in accordance with the present invention;

FIG. **7**A is a schematic representation of a further alternative embodiment of a hydrocratic generator having features and advantages in accordance with the present invention;

FIG. **7**B is a side view of the up tube of FIG. **7**A, showing the slots in the side of the up tube;

FIG. **7**C is a sectional view from below of the shaft support of FIG. **7**A;

FIG. **7**D is a sectional view from above of the vane drum of FIG. **7**A;

FIG. **8**A is a schematic representation of a further alternative embodiment of a hydro-osmotic generator having features and advantages in accordance with the present invention;

FIG. **8**B is a side view of the up tube of FIG. **8**A showing two sets of slots in the side of the up tube;

ClibPDF - www.fastio.com

FIG. **8**C is a sectional view from below of the shaft support of FIG. **8**A;

FIG. **8**D is a sectional view from above of the vane drum of FIG. **8**A;

FIG. **9**A is a schematic view of an up tube with an open lower end with an alternative embodiment of a down tube having a plurality of holes in the sides and the outlet end, having features and advantages in accordance with the present invention;

FIG. **9**B is a sectional view from below of the up tube and the outlet end of the down tube of FIG. **9**A;

FIG. **10**A is a schematic view of an up tube with an open lower end with an alternative embodiment of the down tube with a plurality of secondary down tubes having holes in the sides and the outlet end, having features and advantages in accordance with the present invention;

FIG. **10**B is a sectional view from below of the up tube and the outlet end of the down tube of FIG. **10**A showing the plurality of secondary down tubes and the holes on the outlet ends of the secondary down tubes;

FIG. **11** is a schematic view of an up tube with an open lower end with an alternative embodiment of the down tube with a plurality of secondary down tubes, having features and advantages in accordance with the present invention.;

FIG. **12** is a schematic view of a down tube with a rotating hub and spoke outlets with no up tube;

FIG. **13** is a schematic view of a down tube with a rotating hub and spoke outlets with an up tube, having features and advantages in accordance with the present invention;

FIG. **14** is a schematic view of a portion of an up tube comprising a plurality of concentric up tubes, having features and advantages in accordance with the present invention;

FIG. **15** is a schematic representation of a modified up tube having features and advantages in accordance with the present invention;

FIG. **16** is a schematic illustration of a possible large-scale commercial embodiment of a hydro-osmotic generator having features and advantages in accordance with the present invention;

FIG. **17** is a cutaway view of the turbine and generator assembly of the hydro-osmotic generator of FIG. **12**;

FIG. **18** is a schematic view of an up tube with an open lower end, with an alternative embodiment of the rotating down tube, extending substantially into the up tube, and having holes and turbines mounted thereon, having features and advantages in accordance with the present invention;

FIG. **19**A is a schematic view of an up tube with a closed lower end, with an alternative embodiment of the rotating down tube, extending substantially into the up tube, and having holes and turbines mounted thereon, having features and advantages in accordance with the present invention;

FIG. **19**B is a side view of the up tube shown in FIG. **19**A;

FIG. **20** is a schematic view of an up tube with an open lower end, with an alternative embodiment of the rotating down tube, extending substantially into the up tube, and having holes and turbines mounted thereon, with rotating up tube and down tube, having features and advantages in accordance with the present invention;

FIG. **21** is a schematic view of an up tube upwelling apparatus in accordance with the present invention wherein a rotating helical screw is used to generate the power instead of a plurality of fan blades, having features and advantages in accordance with the present invention;

FIG. **22**A is a side view of an alternative embodiment of a fan blade used in accordance with the present invention;

FIG. **22**B is a schematic view showing the under portion of the fan blade illustrated in FIG. **22**A of the drawings;

FIG. **23** is a schematic representation showing a further device of the invention, including multiple turbines;

FIG. **24***a* is a schematic representation of yet a further embodiment of the invention, including a wrapped tube;

FIG. **24***b* is a cross-section through a part of the apparatus as shown in FIG. **24***a;*

FIG. **25** is a schematic representation showing yet a further embodiment of the invention, including a sleeve tube;

FIG. **26** is a schematic representation showing yet a further embodiment of the invention including a plurality of differently located feed tubes;

FIG. **27***a* is a schematic representation showing a further embodiment of the invention, including feed tubes incorporating rings;

FIG. **27***b* is a schematic representation showing a cross-section through the device of the invention as shown in FIG. **27***a*; and

FIG. **28** is a schematic representation of yet a further embodiment of the invention used in the context of a power generator using sewage or sanitation effluent and may use a brine line from a water desalinization plant.

DESCRIPTION OF THE PREFERRED EMBODIMENTS

As discussed in the Background section above, when solvent fluids having differing osmotic potentials are contacted and mixed with each other energy is released. This released energy results from an increase in entropy of water (or other solvent) when it is transformed from its pure (fresh-water) state to its diluted (salt-water) state. Thus, an entropy gradient is created whenever two bodies of water or other solvents having differing solute concentrations are brought into contact with one another and begin to mix. This entropy gradient can be physically observed and measured in the well-known phenomena known as osmosis.

Because the term "osmosis" is associated with a membrane, the term "hydrocrasis" is used as a term for the situation when solvent fluids having differing osmotic potentials are contacted and mixed with each other in the absence of a membrane.

FIG. **1**A schematically illustrates conventional forward osmosis through a semi-permeable membrane. Forward osmosis results in the flow of water **10** (or other solvent) through a selectively permeable membrane **12** from a lower concentration of solute **14** to a higher concentration of solute **14**. Many references discuss osmotic potential or osmotic pressure in terms of pressure drop Π across a semi-permeable membrane since the easiest way to measure the effect is to measure the difference in height or feet (meters) of head between the high concentration side and the low concentration side of the membrane **12**. Forward osmosis results in the release of work energy.

FIG. **1**B illustrates the condition of reverse osmosis whereby water (or other solvent) **10** under the influence of external pressure is forced through a selectively permeable membrane **12** from a higher concentration of solute **14** to a lower concentration of solute **14**, thus squeezing out or extracting the pure solvent **10** from the solute **14**. Reverse osmosis is widely used in water purification and desalinization plants throughout the world. Reverse osmosis consumes work energy.

To illustrate the amount of work energy dissipated or released in the osmotic process consider a hypothetical

ClibPDF - www.fastio.com

example where a large container of salt water is supported just under the surface of a large open container of fresh water. Moreover, there is an osmotic membrane separating the two containers of water. Attached to the vessel of salt water and extending up out of the fresh water is a slender, tall tube with a volume of exactly one cubic meter. This slender, tall tube is open at the top, and this is the only opening to the salt water vessel. At the start of the hypothetical experiment the water level and pressure in both containers is identical and may be at the bottom of the slender, tall tube. However, osmosis will cause the fresh water to flow into the container of salt water through the membrane and raise the level of salt water in the slender tall tube until the pressure exerted by the column of salt water is sufficient to just cancel or oppose the osmotic pressure across the membrane.

Now, if the top of the tube is cut just below the highest level of water therein, then salt water will begin spilling over and dropping from the top of the tube as fresh water continues to flow through the membrane into the salt water solution at an equal rate. Now, for each cubic centimeter of fresh water that flows through the membrane, an equal volume of salt water solution will be displaced from the top of the tube and drop a certain distance. Clearly, work is being done through the mechanism of osmosis, but how much work is being done? How much pressure is exerted by the column of salt water and what is the height of the column?

For small concentrations of an ideal solution, van't Hoff's formula for osmotic pressure (Π) is:

$$\Pi = -CRT$$

where C=Molar Concentration, R=Gas Constant and T=Absolute temperature. For salt water there are two ions per molecule and:

$$\text{wt (NaCl)} = 58.5\text{ g}$$

$$T = 20^\circ\text{ C.} = 293^*\text{ K.}$$

$$R = 8.3144\text{ J/mole}^\circ\text{ K.}$$

$$C = 35\text{ ppt} = 35{,}000\ g/\text{m}^3$$

$$= (35{,}000 \times 2/58.5\text{ moles})/\text{m}^3$$

$$= 1200\text{ moles/m}^3$$

$$\Pi = -(1200\text{ moles/m}^3)(8.3144\text{ J/mole}^\circ\text{ K.})(293^\circ\text{ K.})$$

$$= -2.9\times10^6\text{ N/m}^2$$

$$= -2.9\times10^6\text{ Pa}$$

$$= -29\text{ atm.}$$

Pascal's Law says:

$$p = \rho g h$$

Setting p (pressure due to the height of a column of liquid) equal to Π (the osmotic pressure) and solving for the height of the column (h) gives:

$$\rho = 1034\text{ kg/m}^3$$

$$g = 9.8\text{ m/s}^2$$

-continued

$$h = (2.9\times10^6\text{ N/m}^2)/((1034\text{ kg/m}^3)(9.8\text{ m/s}^2))$$

$$= 290\text{ m}$$

The incremental work done to displace 1 kg of water is:

$$W = \frac{1}{2}\text{ mgh}$$

$$= (0.5)(1\text{ kg})(9.8\text{ m/s}^2)(290\text{ m})$$

$$= 1.4\text{ kJ}$$

Thus, the osmotic energy potential to be gained from remixing fresh water into saline ocean water is significant—about 1.4 kJ/kg of fresh water, or the equivalent of about 290 m-head of water for a conventional hydropower system. If this source of stored energy could somehow be efficiently exploited, it could result in the production of enormous amounts of inexpensive electrical power from a heretofore untapped and continually renewable energy resource.

Let us now cut the tall tube just below the maximum height of the salt water (290 meters) and attach a spigot. The salt solution would continuously flow out of the spigot. What force is generated when a kilogram of water flows through the tube and falls back to the original water level?

$$W = \text{Mgh}$$

$$= (1\text{ Kg})(9.8\text{ m/s}^2)(290\text{ m})$$

$$= 2.8\times10^3\text{ Joules}$$

If the osmotic membrane had a sufficiently large surface area to allow a flow of one kilogram per second, then the system would be generating 1.4×10^3 Joules per second which is the same as 1.4 Kilowatts.

If a penstock was attached to the end of the spigot and that in turn was attached to a hydroelectric generator placed at the original water level, then that generator (at 100% efficiency) would deliver 1.4 kilowatts of electrical power.

There actually would be no need for either the tall tube or the penstock. The generator would not care if the head pressure was generated by gravity or osmotic pressure. The same electricity would be generated if the opening in the salt water vessel was directly connected to the inlet of the generator.

This is, of course, not a practical system for generating electricity since it relies on an infinitely large rigid vessel and an infinitely large osmotic membrane.

While many systems have been proposed for harnessing this osmotic energy potential, few if any have been commercially successful. One problem is that most osmotic energy recovery systems rely on a conventional forward osmosis process utilizing a semi-permeable membrane. Full-scale commercial development and exploitation of such power-generation systems is hampered by the large membrane surface area required to achieve adequate flow rates and the expense and difficulty of maintaining such semi-permeable membranes. Other systems require the use of exotic bio-elastic materials and/or the use of evaporators, condensers and/or heat exchangers to extract useful work energy from osmotic energy potential.

ClibPDF - www.fastio.com

However, in the unrelated field of ocean mariculture it is known to use the buoyancy effect of fresh water mixed with saline water to provide artificial ocean upwelling for purposes of enriching the waters in the upper photic zone of the ocean with nutrient rich waters from the lower aphotic zones. For example, U.S. Pat. No. 5,106,230, incorporated herein by reference, describes a method for the controlled generation of artificial oceanographic upwelling. The method includes introducing a relatively fresh-water input stream to a predetermined depth, where the fresh-water mixes with the nutrient-rich deep-sea water so as to form a mixture. The mixture is lifted upward by a buoyancy effect brought about by its reduced density, whereby the mixture is conducted towards the surface through an up pipe. The method results in upwelling of cold, nutrient rich water from the lower aphotic regions of the ocean to the upper photic regions where the nutrients may be beneficially used by aquatic sea life.

During recent prototype testing of a similar upwelling device it was discovered, surprisingly, that the amount of upwelling flow achieved in terms of kinetic energy of the overall mass flow was in excess of the input energy into the system in terms of the buoyancy effect and kinetic energy resulting from the fresh water introduced into the up tube. Subsequent experiments using a modified upwelling device have confirmed that the total hydraulic energy output of such system significantly exceeds the total hydraulic energy input.

While an exact explanation for this observed phenomena is not fully appreciated at this time, it is believed that the excess energy output is somehow attributable to the release of osmotic energy potential upon remixing of the fresh water and the salt water in the up tube. This result is particularly surprising since the modified upwelling device incorporated no semi-permeable membrane or other specialized system components heretofore thought necessary to recover such osmotic energy potential. Because no membrane is present, the term hydrocratic generator is applied to the apparatus. For completeness of disclosure and understanding of the invention, the experimental design used in making this discovery is described and discussed below:

Experimental Design

An experimental upwelling apparatus similar to that illustrated in FIG. **2** was constructed using suitable corrosion resistant materials. The ocean was simulated by dissolving 1800 kilograms (2 tons) of sea salt in a 50,000 liter (15,000 gallon) swimming pool. The up tube **40** was a 15 cm (6 inch) inside diameter (i.d.) polyvinylchloride (PVC) tube 1.5 meters long. In some experiments discussed herein, the top of the up tube **40** was left open and unobstructed, as illustrated. In other experiments discussed herein, a turbine was attached to the top of the up tube **40** to convert kinetic flow energy into mechanical work energy. The down tube **20** was a 1.8 cm (½ inch) i.d. (PVC) tube 1 meter long. Two 90° elbows and a short piece of pipe were attached to the end of the down tube **20** so that the fresh water was caused to exit upwards into the up tube **40** from the down tube **20**. The apparatus was attached to a float **48** by nylon support cables **50**, and the outlet end **44** of the up tube **40** was positioned about 15 cm below the surface of the salt water.

The down tube **20** was connected to a reservoir **25** of fresh water. The reservoir **25** was kept at a constant level by continually filling with tap water and allowing the excess to flow out the spill-way **27** so that the flow rate of fresh water through the down tube **20** was kept essentially constant. According to measurements the water in the reservoir **25** contained about 300 ppm of dissolved solids at all times, and the salt water in the swimming pool contained between 34,000 and 36,000 ppm of dissolved solids. The temperature of both the water in the reservoir **25** and the salt water was the same in any individual experiment (18–20° C.), because the salt water tank was set into the ground, and the fresh water in the reservoir came from buried pipes.

The experiment was started by filling the down tube **20** with water to eliminate air bubbles. The height of the reservoir was then adjusted to establish a pressure head that determined the rate of flow of fresh water in the down tube **20**. The reservoir **25** was then filled with fresh water which was then allowed to flow from the reservoir **25** through the down tube **20** whereupon it was introduced into the lower portion of the up tube **40**.

The experiment was monitored by periodically measuring the salinity at the outlet end **44** of the up tube **40** using a Myron L., DS Meter (model 512T5). The flow rate out of the outlet end **44** of the up tube **40** was calculated by measuring the salinity at the outlet end **44** of the up tube **40**. In particular, FIG. **2** shows four reference points in the experimental apparatus: Point **1** is the fresh water reservoir; Point **2** is at the outlet end **44** of the up tube **40** where the salinity was measured; Point **3** is immediately above the outlet end **24** of the down tube **20**; and Point **4** is inside the up tube **40** below the outlet end **24** of the down tube **20**. The following salinities and densities were used in the analysis of the data.

Salinity of Salt Water=35,000 ppm

Salinity of Fresh Water=300 ppm

Density of Salt Water=1.035.

Flow rates were calculated using the following analysis. Since there was a continuous tube from Point **1** to Point **3**, the salinity and flow rate must be the same at Points **1** and **3**. Since the only inlets to the up tube **40** are from Point **3** and Point **4**, the flow at Point **2** must equal the sum of the flows at Point **3** and Point **4**. The equation for the flow at Point **4** is derived from the following analysis:

$$\text{If: } Q_i = \text{Flow at point } i$$

$$= W_T/\rho \text{ per second}$$

$$S_i = \text{Salinity at point } i$$

$$= (W_S/W_T)$$

$$W_S = \text{Weight of Salt in a Solution}$$

$$W_T = \text{Total Weight of Solution}$$

ρ=Density of Solution

Then:

$$S_2 W_{S2}/W_{T2}$$

And since the flow past Point **2** comes from either Point **3** or Point **4**:

$$S_2=(W_{S3}+W_{S4})/(W_{T3}+W_{T4})$$

Substituting in:

$$W_S=S\ W_T$$

Results in:

$$S_2=(S_3W_{T3}+S_4W_{T4})/(W_{T3}+W_{T4})$$

Substituting in:

$$W_T=Q\rho \text{ seconds}$$

ClibPDF - www.fastio.com

Results in:

$$S_2=(S_3Q_3\rho_3+S_4Q_4\rho_4)/(Q_3\rho_3+Q_4\rho_4)$$

Which gives an equation that has one unknown variable (Q_4).

$$Q_4=Q_3(\rho_3/\rho_4)/(S_2-S_3)/(S_4-S_2)$$

It can be assumed, within the accuracy of this experiment, that:

$$S_3=0$$

$$\rho_3=\rho_4$$

Which leaves:

$$Q_4=Q_3S_2/(S_4-S_2)$$

The following Examples 1–4 report the results of several experiments which were conducted using the experimental design described above and as illustrated in FIG. **2**:

EXAMPLE 1

The apparatus shown in FIG. **2** was used to measure observed flow rates in the up tube **40** with different fresh water flow rates introduced into the down tube **20**. Table 1 is a compilation of the results for flow rates at various points in the up tube **40** with two different flow rates of fresh water in the down tube **20**. The flow rate at Point **1**, the flow rate of fresh water from the reservoir, and the salinity at Point **2** at the outlet end **44** of the up tube **40** were measured parameters. The flow rate at Point **3**, the outlet end **24** of the down tube **20**, was the same as the flow rate at Point **1**. The remaining flow rates were calculated using the equations discussed above.

TABLE 1

Flow Rates at Various Locations in the Up Tube

Height of Reservoir	Salinity at Point	Flow (10^{-4} m^3/sec)			
(meters)	2 (ppt)	Point 1	Point 2	Point 3	Point 4
0.23	34	1.3	45.5	1.3	44.2
0.55	34	2.4	84.0	2.4	81.6

The results indicate that the flow rate of the mixed salt-water/fresh-water solution at Point **2** at the outlet end **44** of the up tube **40** far exceeded the flow rate of fresh water at Point **1** and Point **3**. Introducing fresh water into the down tube **20** and allowing the salt water to flow into the up tube **40** therefore generated higher flow rates at Point **2**, at the top of up tube **40**.

In order to demonstrate that this higher flow rate at Point **4** was not due to transfer of kinetic energy from the fresh water flow coming from the down tube **20**, the following experiment was performed.

EXAMPLE 2

Flow Rates through the Up Tube with Salt Water vs. Fresh Water Introduced into the Down Tube

For this experiment, a 6" turbine roof vent was attached to the outlet end **44** of the up tube **40**. One of the vanes was painted to allow for the counting of rotations. The reservoir was filled with fresh water having a salinity of 300 ppm in one experiment and with salt water having a salinity of 36,000 ppm in a second experiment. The reservoir was placed at a height of 0.55 meters above the water level of the salt water in the pool. The fresh water was then allowed to flow through the down tube **20**, and the rate at which the turbine rotated was determined. Then, salt water from the salt water pool was allowed to flow through the down tube **20**, and the rate at which the turbine rotated was again determined. The results are shown in Table 2 below.

TABLE 2

Turbine Speed with Fresh Water vs. Salt Water in Down Tube

	Down Tube Water Flow (10^{-4} m^3/sec)	Turbine Speed (rpm)
Fresh Water (0.3 ppt)	2.4	5.6
Salt Water (36 ppt)	2.3	2.3

As illustrated in Table 2, above, the turbine rotated 2.4 times more rapidly when fresh water was introduced into the down tube **20** than when salt water was used. The higher turbine speed when fresh water was introduced into the down tube **20** is a direct indication that the water flow in the up tube **40** was higher when fresh water rather than salt water was introduced into the down tube **20** and that the higher observed water flow rates from the top of the up tube **40** in Example 1 were not due solely to kinetic energy transfer from the fresh water flow out of the down tube **20**.

The kinetic energy transferred from the salt water in the down tube **20** to the salt water in the up tube **40** would be at least as great (if not slightly greater due to increased density of salt water) as the kinetic energy transferred from the fresh water in the down tube **20**. The results shown in Table 2 indicate that some, but not all, of the upwelling of water in the up tube **40** is due to kinetic energy transfer from the water introduced into the down tube **20**.

The power which is available from the kinetic energy of the water flow at various locations in the up tube **40** can be calculated as follows:

$$\begin{aligned}
P_k &= \text{Power from Kinetic Energy} \\
&= \frac{1}{2}M_q\ v^2 \\
&= \frac{1}{2}(\rho Q)(16Q^2/\Pi^2 d^4) \\
&= 8Q^3\rho/\Pi^2 d^4 \\
\text{where: } A &= \text{Cross Sectional Area} \\
&= \Pi d/4 \\
d &= \text{Tube Diameter} \\
M_q &= \text{Mass Flow} \\
&= Q\times\rho \\
\rho &= 1+(S_i/1000) \\
v &= \text{Velocity} \\
&= Q/A
\end{aligned}$$

ClibPDF - www.fastio.com

Table 3 shows the calculated power attributable to kinetic energy at the three points in the up tube **40**.

TABLE 3

Kinetic Energy at Various Points in the Up Tube

Height of Reservoir	Salinity at Point 2	Kinetic Power (watts)		
(meters)	(ppt)	Point 2	Point 3	Point 4
0.23	34	0.16	0.02	0.14
0.55	34	0.98	0.11	0.90

In the following series of experiments, the diameter of the down tube **20** and the rate of flow of the fresh water which was introduced into the down tube **20** were varied to determine the dependence of the rate of upwelling in the up tube **40** on these parameters.

EXAMPLE 3

A series of experiments were carried out using the experimental design described above and as illustrated in FIG. **2**, but with down tubes **20** having different diameters. With each down tube **20**, the flow rates of the fresh water in the down tube **20** were varied to determine the effect of different fresh water flow rates on available power. The salinity at the outlet end **44** of the up tube **40** was measured, and the water flow rates were calculated from the salinity as before. The water flow rates were used to calculate the available power at Point **2**, the outlet end **44** of the up tube **40**. The available power was then normalized by dividing the available power by the fresh water flow rate in the down tube **20**. The results are shown in Table 4 below.

Table 4

Normalized Power Production vs. Diameter of Up Tube and Fresh Water

Flow Rates

Salinity at Point 2	Flow (×0.0001 m^3)			Down Tube	Ratio of Up Tube Area to Down Tube	Power/Fresh Water Flow
(ppt)	Point 1	Point 4	Point 2	Area (m^2)	Area	(Watts/m^3)
31.8	22	259	281	0.000254	69.7	1312
32.6	18	309	327	0.000071	249	2715
33.4	5.2	158	163	0.000018	983	1256
31.4	33	334	367	0.000254	69.7	1877
32.6	26	446	472	0.000071	249	5664
33.3	7.6	211	218	0.000018	983	2047
35.0	5	168	173	0.000010	1770	1559

In all cases, the power per unit volume of fresh water introduced into a down tube **20** of a given diameter increased as the flow rate of fresh water through the down tube **20** increased. Thus, for the down tube **20** with an area of 0.000254 m^2, the power/m^3 of fresh water flow increased from 1312 watts/m^3 with a fresh water flow rate of 22×10^{-4} m^3 to 1877 watts/m^3 with a fresh water flow rate of 33×10^{-4} m^3. The same trend was maintained for the down tubes having areas of 0.000071 and 0.000018 m^2. Thus, the data illustrates that increasing the fresh water flow rate in a down tube **20** having a given area increased the normalized available power output of the device.

Second, although the power per unit volume of fresh water introduced into the down tube **20** increased with increased volume of fresh water introduced into the down tube **20** in all cases, the percent increase in the power with increase in fresh water flow rate was less for the largest down tube **20** (0.000254 m^2 area) than for the other down tubes **20**. When the fresh water flow rate increased from 22×10^{-4} m^3/sec to 33×10^{-4} m^3/sec, or by 50%, with the largest down tube **20**, the power/fresh water flow rate increased from 1312 watts/m^3 to 1877 watts/m^3, or 40%. By comparison, when the fresh water flow rate for the down tube **20** with an area of 0.000018 m^2/sec was increased from 5.2 to 7.6×10^{-4} m^3/sec, or 46%, the power/fresh water flow rate increased from 1256 watts/m^3 to 2047 watts/m^3, or 62%, more than 1.5 times as much as for a comparable percent change in the fresh water flow rate with the larger down tube **20**.

Similarly, when the fresh water flow rate for the down tube **20** with an area of 0.000071 m^3 increased from 18 to 26×10^{-4} m^3/sec, or 44%, the power/fresh water flow rate increased from 2715 watts/m^3 to 5664 watts/m^3 or 108%, more than 2.5 times as much as for the largest down tube **20**. The efficiency of power production declined with the largest diameter down tube **20**.

These results are shown graphically in FIG. **3**. The graphs depicted therein appear to show that there is an optimum ratio (about 250:1) of the area of the up tube **40** relative to the area of the down tube **20** that maximizes normalized power production. At ratios higher or lower than about 250 the normalized power per unit volume of fresh water declines.

Although a ratio of the area of the up tube **40** relative to the area of the down tube **20** of approximately 250 appears to be optimal, the ratio may range from approximately 5 to 50,000, more preferably from 50 to 2000.

The previous examples and discussions illustrate that a suitably constructed upwelling apparatus as illustrated in FIG. **2** has the potential of generating useful power by mixing aqueous liquids having different osmotic potentials. The simple experimental apparatus illustrated in FIG. **2** generates 0.98 watts with a fresh water flow of 2.4×10^{-4} cubic meters per second. This is equivalent to 4 kilowatts per

ClibPDF - www.fastio.com

cubic meter of fresh water per second, indicating an efficiency of about 0.15%. The actual efficiency and capacity of a commercial-scale power production facility will depend on a number of factors, including the size of the up tube, the ratio of the flow area of the fresh water down tube **20** to the flow area of the up tube **40**, and the rate of fresh water flow. Those skilled in the art will recognize that the experimental apparatus disclosed and discussed herein-above may be modified and improved in other obvious ways to achieve even greater power production and/or efficiency of operation.

The remaining detailed discussion and corresponding figures illustrate various possible embodiments of a commercial hydrocratic generator utilizing the principles discussed above and having features and advantages in accordance with the present invention. Although the various embodiments of the apparatus depicted and described herein vary somewhat in design and operation, certain common features and advantages will become readily apparent and, thus, the descriptions thereof will not be repeated.

FIG. **4** is a simple schematic illustration of one possible embodiment of a hydrocratic generator **100** utilizing the principles discussed above and having features and advantages in accordance with the present invention. The device **100** generally comprises a down tube **20**, an up tube **40**, and a power plant generator **60**. The particular device illustrated in FIG. **4** may be adapted for either large-scale deep water applications or for relatively small-scale or intermediate-scale power generation facilities in shallow coastal waters, as desired. For example, the depth of water illustrated in FIG. **4** may be 10 to 50 meters or more, with the up tube **40** being 1–5 meters in diameter.

In a preferred embodiment, fresh water is introduced into the down tube **20** in order to power the device. The term "fresh" water as used herein is to be interpreted in a broad sense as water having an osmotic potential relative to sea water. Thus, it may be used to describe the input stream a river discharge, a mountain run-off, a treated sewage discharge, a melting iceberg, or even runoff from a city storm drainage system.

The fresh-water input stream may be conducted though the down tube **20** by applying pressure at the inlet end **22** of the down tube **20**. The pressure may be provided by a pumping station or with a hydrostatic head pressure resulting from a fluid reservoir at a higher elevation. The pressure applied at the inlet end **22** of the down tube **20** need only be high enough to overcome the hydrostatic head at the outlet end **24** of the down tube **20**.

It has been found that, when fresh water is introduced into the down tube **20**, sea water flows into the up tube **40**, causing upwelling in the up tube **40** that can be used to generate power with the power generator **60**. Some of this upwelling effect is due to the increased buoyancy of the mixed water in the up tube **20**, because fresh water has a lower density than sea water. However, far more upwelling of sea water is observed than would be expected from this phenomenon alone. It is believed that the apparatus and the method is able to harness the energy available from the different osmotic potentials of fresh water and sea water. The amount of upwelling and the amount of power that is generated in the device depend in part on the particular dimensions of the up tube **40** and the down tube **20** and the flow rate of fresh water in the down tube **20**.

As shown in FIG. **4**, the down tube **20** has an inlet end **22** and an outlet end **24**. The inlet end **22** is connected to a supply **25** of relatively fresh water. For example, this fresh water supply **25** may comprise a reservoir, pump or other source as desired or expedient. The outlet end **24** of the down tube **20** is open such that the fresh water discharges through the outlet end **24** of the down tube **20** into the up tube **40**. In alternative embodiments the outlet end **24** of the down tube **20** may be connected to an intermediate mixing chamber (not shown) which then discharges into the up tube **40**.

Although the down tube **20** may be any of a variety of diameters, one criterion is to choose a diameter for the down tube **20** which minimizes the resistance to fluid flow through the down tube **20**. Resistance to flow through a tube decreases as the diameter of the tube increases. Choosing a large diameter for the down tube **20** therefore minimizes the resistance of the tube for a given flow rate.

Another criterion in choosing the diameter of the down tube **20** is to maximize the amount and efficiency of power generated by the power generator **60**. When the diameter of the down tube **20** exceeds a certain value relative to the up tube **40**, it has been discovered that the efficiency of power generation declines as the diameter of the down tube **20** is increased further. There is therefore an optimum in the ratio of the diameter of the down tube **20** relative to the diameter of the up tube **40**, and therefore the ratio of the area of the down tube **20** relative to the area up tube **40**, in order to maximize the efficiency of power generation. When the ratio of the area of the down tube **20** to the up tube **40** increases beyond the optimal value, the increase in efficiency of power generation with increased fresh water flow in the down tube **20** is less than with a down tube **20** having a smaller area relative to the up tube **40** area. Choosing the diameter of the down tube **20** to maximize power production therefore involves tradeoffs to choose the maximum diameter possible without losing power efficiency.

In the embodiment of the apparatus shown in FIG. **4**, the outlet end **24** of the down tube **20** is located inside the up tube **40**. In this embodiment, the outlet end **24** of the down tube **20** is preferably oriented so that the outlet end **24** of the down tube **20** points upward.

The up tube **40** has an lower end **42** and an outlet end **44**. In the embodiment of FIG. **4** both the lower end **42** and the outlet end **44** of the up tube **40** are open. In other embodiments, the lower end **42** of the up tube **40** may contain vanes or other means of directing water flow. Some of these alternative embodiments of the up tube **40** are illustrated in other figures herein.

Although the diameters of the lower end **42** and the outlet end **44** of the embodiment of the up tube **40** shown in FIG. **4** are equal, the lower end **42** and the outlet end **44** of the up tube **40** may have different diameters in other embodiments. For example, the up tube may be positively or negatively tapered to form a nozzle or diffuser. Alternatively, the up tube **40** can have a necked-down portion to form an accelerated flow there-through.

In the embodiment of FIG. **4** the outlet end **44** of the up tube **40** is attached to a flotation system for locating the up tube **40** at a predetermined depth. Other means of locating the up tube **40** at a predetermined depth may also used in place of the flotation system, and the invention is not limited to the embodiment shown in FIG. **4**. The flotation system shown in FIG. **4** comprises one or more floats **48** and one or more support cables **50**. The float **48** may be formed of Styrofoam, or it may comprise a plurality of individual air bags, drums, or any other suitable material capable of producing buoyancy.

In some embodiments, the lower end **42** of the up tube **40** is attached to mooring cables **52**. The mooring cables **52** extend from the lower end **42** of the up tube **40** to anchors

ClibPDF - www.fastio.com

56 fixed on the sea floor. The mooring cables **52** and the anchors **56** retain the up tube **40** in a predetermined location on the sea floor. The lifting force of the float **48** transmitted through support cables **50** retains the up tube **40** at a desired predetermined vertical orientation.

In the embodiment shown in FIG. **4**, the down tube **20** is also attached to mooring cables **52** which extend to anchors **56** on the ocean floor. The mooring cables **52** and anchors **56** hold the down tube **20** in place. The down tube **20** is arranged so that it discharges the fresh water into the up tube **40**.

Just as choosing an optimal diameter for the down tube **20** involves tradeoffs, choosing the diameter of the up tube **40** also involves optimization. Increasing the diameter of the up tube **40** increases the amount of upwelling in the up tube **40** and therefore increases power production. However, increasing the diameter of the up tube **40** increases both the size and the cost of the apparatus. Further, increasing the area of the up tube **40** allows the use of a down tube **20** with a greater area without losing efficiency in generating power. The ratio of the area of the down tube **20** to the area of the up tube **40** is therefore the parameter which is to be optimized rather than the diameter of either the up tube **40** or the down tube **20** alone The optimal diameters for the up tube **40** and the down tube **20** are interdependent on one another, because the ratio of the areas of the two tubes is a more important parameter in optimizing power production than the area, and therefore the diameter, or either the up tube **40** or the down tube **20** alone.

Advantageously the down tube **20** and the up tube **40** are not subjected to excessively high pressures. In the embodiment shown in FIG. **4**, the up tube **40** contains the sea water entering from the lower end **42** of the up tube **40** and the fresh water coming out of the outlet end **24** of the down tube **20**. Because the up tube **40** is operated at low pressures, the up tube **40** can be constructed of relatively inexpensive and lightweight materials such as plastic, PVC, lightweight concrete, and the like.

Although the down tube **20** is subjected to higher pressures than the up tube **40**, the pressures in the down tube **20** are typically small. Thus, inexpensive materials can therefore generally be used for both the up tube **40** and the down tube **20**. Suitable materials for constructing the down tube **20** and the up tube **40** include, but are not limited to, polyvinyl chloride (PVC), fiberglass, polyethylene (PE), polypropylene (PP), concrete, gunite, and the like. Alternatively, other materials such as stainless steel or titanium may also be used. Because the up tube **20** and the down tube **40** are generally exposed to water of relatively high salinity, it is preferable to form the down tube **20** and the up tube **40** from materials which are resistant to corrosion from salt water. Although the materials listed above are, in general, resistant to corrosion, some alloys of stainless steel are not suitable for extended use in salt water. If stainless steel is chosen as a material of construction, it is preferable to select an alloy of stainless steel which is resistant to corrosion by salt water.

The outlet end **44** of the up tube **40** may extend to or above the surface of the sea or may be located at any depth beneath the surface of the sea. In one embodiment, the outlet end **44** of the up tube **40** is located in the photic zone so as to bring nutrient-rich deep-sea water to the photic zone to enhance growth of the organisms in the photic zone through mariculture.

The length of the up tube **40** may vary, depending on a variety of factors. The length of the up tube is preferably sufficient to allow complete mixing of the fresh water with the salt water, but not so long as to cause unnecessary drag on the water flow. The optimal length will be determined as that which allows maximum output flow rate and power production for a given range of input fresh-water flow rates. The length of the up tube **40** may also be chosen based on a desire to facilitate mariculture, the promotion of growth of organisms in the sea by transfer of nutrients from nutrient-rich depths to the nutrient-poor water at lesser depths. If mariculture is practiced, the lower end **42** of the up tube **40** is preferably located at a depth of the sea where large concentrations of nutrients are available, and the outlet end **44** of the up tube **40** is preferably located in the photic zone. In this embodiment, the up tube **40** carries nutrient-rich water from the depth of the lower end **42** of the up tube **40** to the outlet end **44** of the up tube **40** in the photic zone, where few nutrients are available, thereby enhancing growth of the organisms in the photic zone. The length of the down tube **20** is relatively unimportant, provided that it is long enough to deliver the fresh water into the up tube.

The power generator **60** generates electricity from the water flow inside the up tube **40**. FIG. **4** shows one simplified form of a power generator **60** suitable for use with the present invention. The power generator **60** comprises one or more turbines or propellers **62** attached to a shaft **64**. In a preferred embodiment, there are a plurality of propellers **62** attached to the shaft **64**. The shaft **64** is connected to an electrical generator **66**. When water upwells in the up tube **40**, the upwelling water turns the propellers **62**, which in turn rotate the shaft **64**. The rotating shaft **64** drives the electrical generator **66**, thereby generating power.

Preferably, one or more shaft supports **68** are provided to support the shaft **64** to minimize wobbling of the shaft **64** while the upwelling water turns the one or more propellers **62** attached to the shaft **64**. In a preferred embodiment, a plurality of shaft supports **68** engage the shaft **64** to support the shaft **64** to minimize wobbling. In the embodiment shown in FIG. **4**, three shaft supports **68** are present to support the shaft **64**, a lower shaft support **68**, a middle shaft support **68**, and an upper shaft support **68**. Further details on the shaft supports **68** are given in FIG. **7**C, described later.

The propellers **62** on the shaft **64** may be inside the up tube **40**, above the outlet end **44** of the up tube **40**, or both inside the up tube **40** and above the outlet end **44** of the up tube **40**. The propellers **62** on the shaft **64** may be located above the middle shaft support **68**, below the middle shaft support **68**, or both above and below the middle shaft support **68**. In the embodiment of FIG. **4**, the propellers **62** are located inside the up tube **40** below the middle shaft support **68**. Similarly, the electrical generator **66** may be conveniently located above or below the surface of the water in which the up tube **40** is located. In the embodiment shown in FIG. **4**, the electrical generator **66** is located above the surface of the water in order to minimize maintenance expense.

FIG. **5** shows an alternative embodiment of a power generator **60**. In this case, the power generator **60** comprises propellers **62** attached to the shaft **64** both above and below the middle shaft support **68**. The shaft **64** is attached to the electrical generator **66**, which generates electrical power when the shaft **64** rotates due to the water flow in the up tube **40**. Again, the electrical generator **66** of FIG. **5** is located above the surface of the water. In alternative embodiments, the electrical generator **66** may be located below the surface of the water, if desired.

FIG. **6** shows a further alternative embodiment of a power generator **60** in which one or more spiral fans **70** are mounted on the shaft **64**. Shaft supports **68** may optionally be provided to minimize wobbling of the shaft **64**. The one

ClibPDF - www.fastio.com

or more spiral fans **70** may be attached to the shaft **64** above the middle shaft support **68**, below the middle shaft support **68**, or both above and below the middle shaft support **68**. One or more spiral fans **70** may be mounted on the shaft **64** on the outlet end **44** of the up tube **40**. In an alternative embodiment, one or more spiral fans **70** may be mounted both inside the up tube **40** and on the outlet end **44** of the up tube **40**. In the embodiment of FIG. **6**, the spiral fan **70** is attached to the outlet end **44** of the up tube **40**.

The spiral fan **70** comprises a plurality of spiral vanes **72**. The water flow up the up tube **40** contacts the plurality of spiral vanes **72**, turning the one or more spiral fans **70** mounted on the shaft **64**. Turning the one or more spiral fans **70** rotates the shaft **64**. The rotating shaft **64** drives the electrical generator **66**, generating electrical power. Again, the electrical generator **66** may be conveniently located above or below the surface of the water, as desired.

In the embodiment of the power generator **60** shown in FIG. **6**, both propellers **62** and one spiral fan **70** are mounted on the shaft **64**. The propellers **62** and spiral fans **70** may be mounted on the shaft **64** in any order, above, below, or both above and below the middle shaft support **68**. The propellers **62** and spiral fans **70** may also be mounted on the shaft **64** inside the up tube **40** and/or above the outlet end **44** of the up tube **40**. In FIG. **6**, propellers **62** are mounted on the shaft **64** inside the up tube **40** below the middle shaft support **68**, and the single spiral fan **70** is mounted on the outlet end **44** of the up tube **40**. The electrical generator **66** is located above the water.

FIG. **7**A shows a further alternative embodiment of the up tube **40** in which the lower end **42** of the up tube **40** is closed. The down tube **20** passes through the closed lower end **42** of the up tube **40**. Although FIG. **7**A shows that the down tube **20** is attached to one or more mooring cables **52** which are attached to anchors **56** on the ocean floor, the down tube **20** may also be supported by the closed lower end **42** of the up tube **40**. The closed lower end **42** of the up tube **40** of FIG. **7**A helps to keep the down tube **20** in position without the need for mooring cables **52** and anchors **56**.

The up tube **40** of the embodiment of FIG. **7**A comprises a plurality of slots **76**, as shown in FIG. **7**B. The plurality of slots **76** are open to the surrounding sea and allow the sea water to enter the up tube **40**. One or more shaft supports **68** are attached to the up tube **40**. One possible embodiment of a suitable shaft support **68** is shown in FIG. **7**C. The shaft support **68** comprises one or more hydrodynamic cross members **78** and a bearing **80**. The cross members **78** are attached to the up tube **40** at a first end and to the bearing **80** at a second end, thereby suspending the bearing **80** inside the up tube **40**. The bearing **80** can have a variety of designs such as ball bearings, compression bearings, and the like. The cross members **78** are preferably hydro-dynamically shaped so as to not slow down water flow in the up tube **40**. The shaft support **68** supports the shaft **64**, minimizing the wobbling of the shaft **64** when the shaft **64** rotates.

The power generator **60** of the embodiment shown in FIG. **7**A comprises a vane drum **90** inside the up tube **40**. The vane drum **90** comprises a plurality of rings **92** connected by a plurality of curved vanes **94**. FIG. **7**D shows a sectional view of the vane drum **90**. Each curved vane **94** is attached by a first edge **96** to each of the plurality of rings **92**. The curved vanes **94** are attached to the plurality of rings **92** in a manner so that the curved vanes **94** form a helical curve when viewed from the side, as shown in FIG. **7**A. The helical curved shape of the curved vanes **94** improve the efficiency of energy transfer from the water flow through the slots **76** on the up tube **40** compared to the efficiency of curved vanes **94** which are not oriented with a helical curve. FIG. **7**D shows the curved vanes **94** attached to the ring **92** from above as illustrated in FIG. **7**A. FIG. **7**D also shows the preferred curved surface of the curved vanes **94** as well as the helical orientation of the curved vanes **94** as viewed from above.

In one preferred embodiment, the vane drum **90** is attached to the shaft **64**. When the sea water is drawn into the up tube **40** through the slots **76**, the incoming water contacts the curved vanes **94**, rotating the vane drum **90**, which in turn rotates the shaft **64**. The rotating shaft **64** turns the electrical generator **66**, generating power from the upwelling water in the up tube **40**.

FIG. **8**A illustrates a further alternative embodiment of the power generator **60** comprising two vane drums **90**, a first vane drum **90** below the middle shaft support **68** and a second vane drum **90** above the middle shaft support **68**. In a preferred embodiment, both the first vane drum **90** and the second vane drum **90** are attached to the shaft **64** so that the shaft **64** rotates when the vane drums **90** rotate due to the flow of water through the slots **76** into the up tube **40**. The rotating shaft **64** rotates the shaft of the electrical generator **66**, generating electrical power.

In the embodiment of the up tube **40** shown in FIG. **8**B, there are preferably two sets of slots **76** in the up tube **40** and two vane drums **90**. In another embodiment, there are two vane drums **90** as in the embodiment shown in FIG. **8**A, but the up tube **40** comprises only a single set of slots **76** in the up tube **40**, as in the embodiment of the up tube **40** shown in FIG. **7**B.

FIG. **9**A shows an alternative embodiment of the down tube **20** in which a plurality of holes **110** are present in the side of the down tube **20**. FIG. **9**B shows a view of the outlet end **24** of the down tube **20** of FIG. **9**A. The outlet end **24** of the down tube **20** of FIG. **9**A is sealed except for a single hole **110**. In alternative embodiments, a plurality of holes **110** may be provided in the outlet end **24** of the down tube **20**. The fresh water flowing through the down tube **20** of FIG. **9**A flows out of the plurality of holes **110** and into the up tube **40**. Although the embodiment of the apparatus shown in FIG. **9**A shows the alternative down tube **20** with the embodiment of the up tube **40** of FIGS. **4**–**6** with an open lower end **42**, the down tube **20** of FIG. **9**A may also be used with the embodiment of the up tube **40** such as shown in FIG. **7**A or **8**A with a closed lower end **42**.

FIGS. **10**A and **10**B show another embodiment of the down tube **20** in which the down tube **20** separates into a plurality of secondary down tubes **120** In the embodiment shown in FIG. **10**A, there are a plurality of holes **110** in the secondary down tubes **120**, similar to the embodiment of the down tube **20** shown in FIG. **9**A. FIG. **10**B shows a sectional view of the down tube **20** of the embodiment of FIG. **10**A from below. In the embodiment shown in FIG. **10**B the outlet end **24** of each of the five secondary down tubes **120** is closed except for a single hole **110**. In the embodiment of the down tube **20** of FIGS. **10**A and **10**B, the fresh water that is introduced into the down tube **20** exits the holes **110** to enter the up tube **40**.

In other embodiments the down tube **20** may separate into a plurality of secondary down tubes **120**, as in the embodiment of the down tube **20** of FIG. **10**A, but there are no holes **110** in the secondary down tubes **120**, and the outlet ends **24** of the secondary down tubes **120** are open. In this embodiment of the down tube **20** (not shown), the fresh water which is introduced into the down tube **20** exits the open outlet ends **24** of the secondary down tubes **120** to enter the up tube **40**.

ClibPDF - www.fastio.com

FIG. **11** shows an alternative embodiment of the down tube **20** in which the down tube separates into a plurality of secondary down tubes **120**. In the embodiment shown in FIG. **11**, the down tube **20** separates into a plurality of secondary down tubes **120** outside of the up tube **40**. In the embodiment shown in FIG. **11**, there are no holes in the secondary down tubes **120**, as in the embodiments shown in FIGS. **9**A and **10**A. In other embodiments there are a plurality of holes **110** in the secondary down tubes **120**.

Although the embodiment of the apparatus shown in FIG. **11** shows the alternative down tube **20** with the embodiment of the up tube **40** of FIGS. **4**–**6** with an open lower end **42**, the alternative down tube **20** of FIG. **11** may also be used with the embodiment of the up tube **40** such as shown in FIG. **7**A or **8**A with a closed lower end **42**.

FIG. **12** shows another embodiment of the down tube **20** in which the down tube **20** terminates in a hub **122**. The hub **122** forms a cap on the down tube **20** and rotates freely on the down tube **20**. A plurality of spoke outlets **124** are fluidly connected to the hub **122**. The plurality of spoke outlets **124** emerge at approximately a right angle from the hub **124** and then bend at a second angle before terminating in a spoke discharge **126**. The spoke discharge **126** may have an open end or a partially closed end where the water from the down tube **20** discharges. The embodiment of the down tube **20** shown in FIG. **12** is similar to a rotating lawn sprinkler. The hub **122** is attached to the shaft **64**, which is in turn connected with the electrical generator **66**. In the embodiment shown in FIG. **12**, there is no up tube **40**.

When fresh water flows through the down tube **20** and is discharged out of the spoke outlets **124**, the hub **122**, shaft **64**, and electrical generator **66** rotate, generating electrical power. In the embodiment shown in FIG. **12**, the energy generated by the electrical generator **66** comes almost exclusively from the kinetic energy from the water emerging from the plurality of spoke discharges **126**, because there is no up tube **40** or means of generating power from hydrocratic energy generated from the mixing of fresh water from the down tube **20** with water of high salinity.

FIG. **13** shows another embodiment of the down tube **20** similar to the embodiment of FIG. **12**, with a hub **122**, a plurality of spoke outlets **124**, and a plurality of spoke discharges **126** at the ends of the spoke outlets **124**. The embodiment of FIG. **13** differs from the embodiment of FIG. **12** in that the spoke discharges **126** discharge the fresh water from the down tube **20** into an up tube **40** with an open lower end **42** and a plurality of propellers **62** attached to the shaft **64**. The fresh water which exits the spoke discharges **126** into the up tube **40** causes upwelling in the up tube **40**, rotating the propellers, which in turn drive the shaft **64**. The shaft **64** drives a electrical generator **66** (not shown), generating electrical power.

In the embodiment of the apparatus shown in FIG. **13**, the shaft **64** is rotated both by the discharge of water from the spoke discharges **126** rotating the hub **122** and by the upwelling in the up tube **40** turning the propellers **62**, which in turn rotate the shaft **64**. The energy generated in the embodiment of the apparatus shown in FIG. **13** is therefore a combination of kinetic energy from the rotation of the hub **122**, shaft **64**, and electrical generator (not shown) from the fresh water ejected from the spoke discharges **126** and from hydrocratic energy generated from the upwelling in the up tube **40** from the mixing of fresh water from the spoke discharges **126** mixing with the water of high salinity entering the up tube **40** from the lower end **42**.

FIG. **14** illustrates another embodiment of the up tube **40** in which there are a plurality of nested up tubes **40** having increasing diameters. The lower end **42** of each of the plurality of nested up tubes **40** is open. Fresh water is introduced into the down tube **20** causing upwelling in the plurality of up tubes **40** when the water of high salinity enters the open lower ends **42** of the nested up tubes **40**.

Any of the embodiments of power generators **60** can be combined with the embodiment of the nested up tubes **40** of FIG. **14**. For example, in one embodiment, the propellers **62** of FIGS. **4** and **5** may be used as a power generator **60** in combination with the nested up tubes **40** of FIG. **14**. In another embodiment, the power generator **60** may comprise one or more spiral fans **70**, as shown in FIG. **6**.

FIG. **15** shows another embodiment of the up tube **40** and power generator **60**. In the embodiment of FIG. **15**, a plurality of turbines **130** are mounted on a shaft **64** interspaced between a plurality of stators **132**. The stators **132** direct the water flow into the turbine blades of the turbines **130** to increase the efficiency thereof. The shaft **64** is connected to an electrical generator **66** (not shown). When water upwells in the up tube **40**, the upwelling water turns the turbines **130**, which in turn rotate the shaft **64** and the electrical generator **66**, generating power.

In the embodiment shown in FIG. **15**, the portion of the up tube **40** surrounding the turbines **130** and stators **132** comprises a nozzle **134** and an expander **136**. The nozzle **134** reduces the diameter of the up tube **40** in the portion of the up tube **40** around the turbines **130** and stators **132** from the diameter of the remainder of the up tube **40**. By reducing the diameter of the up tube **40** with the nozzle **134** in the portion of the up tube **40** surrounding the turbines **130**, the upwelling water is forced into a smaller area and is accelerated to a higher velocity water flow that can be harnessed more efficiently by the turbines **130**. Nozzles **134** and stators **132** can also be used with other embodiments of the power generator **60** illustrated herein.

FIG. **16** is a schematic illustration of a possible large-scale commercial embodiment of a hydrocratic generator having features and advantages of the present invention. While a particular scale is not illustrated, those skilled in the art will recognize that the device **200** is advantageously suited for large-scale deep-water use 100–500 meters or more beneath sea level. The up tube **240** extends upward and terminates at any convenient point beneath sea level. The diameter of the up tube may be 3–20 meters or more, depending upon the desired capacity of the hydrocratic generator **200**. This particular design is preferably adapted to minimize environmental impact and, therefore, does not result in upwelling of nutrient rich water from the ocean depths.

Sea water is admitted into the device from an elevated inlet tube **215** through a filter screen or grate **245**. The filter removes sea life and/or other unwanted objects or debris that could otherwise adversely impact the operation of generator **200** or result in injury to local sea life population. If desired, the inlet tube **215** may be insulated in order to minimize heat loss of the siphoned-off surface waters to colder water at or near full ocean depth. Advantageously, this ensures that the temperature and, therefore, the density of the sea water drawn into the generator **200** is not too cold and dense to prevent or inhibit upwelling in the up tube **240**.

The sea water is passed through a hydraulic turbine power plant **260** of the type used to generate hydraulic power at a typical hydro-electric facility. The turbine and generator assembly is illustrated in more detail in the cutaway view of FIG. **16**. Water enters the turbine **261** through a series of louvers **262**, called wicket gates, which are arranged in a ring around the turbine inlet. The amount of water entering the turbine **261** can be regulated by opening or closing the

ClibPDF - www.fastio.com

wicket gates **262** as required. This allows the operators to keep the turbine turning at a constant speed even under widely varying electrical loads and/or hydraulic flow rates. Maintaining precise speed is desirable since it is the rate of rotation which determines the frequency of the electricity produced.

As illustrated in FIG. **16**, the turbine is coupled to an electric generator **266** by a long shaft **264**. The generator **266** comprises a large, spinning "rotor" **267** and a stationary "stator" **268**. The outer ring of the rotor **267** is made up of a series of copper wound iron cells or "poles" each of which acts as an electromagnet. The stator **268** is similarly comprised of a series of vertically oriented copper coils disposed in the slots of an iron core. As the rotor **267** spins, its magnetic field induces a current in the stator's windings thereby generating alternating current (AC) electricity.

Referring again to FIG. **16**, the sea water is discharged from the turbine into the up tube **240**. Fresh water is introduced into the base of the up tube **240** by down tube **220**. The mixing of fresh water into saline sea water releases the hydrocratic or osmotic energy potential of the fresh water in accordance with the principles discussed above, resulting in a concomitant pressure drop (up to 190 meters of head) across the hydraulic turbine **260**. This pressure drop in conjunction with the induced water flow upwelling through the up tube **240** allows for generation of significant hydro-power for commercial power production applications without adversely affecting surrounding marine culture.

With reference to FIG. **18** of the drawings, this embodiment shows an up tube **40** having an open lower end **42** and an open outlet end **44**. A down tube **20** is provided which enters the up tube **40** through the lower end **42**, and extends to a point approximately midway along the length of the up tube, where it is sealed by a cap **302**. A shaft **64** extends upwardly from the cap **302**, extending to a generator, not shown in FIG. **18**, but substantially similar to generators shown in some of the Figures described above.

Although in the embodiment shown in FIG. **18**, the down tube **20** is shown as extending to a point approximately midway up the length of the up tube **40**, this construction may, in practice, vary widely according to the conditions, length of the up tube **40**, and other apparatus parameters. Thus, the down tube **20** may extend only a short distance into the up tube **40**, or it may extend well beyond the midpoint thereof, to a selected height.

The down tube **20** comprises an outside portion **304**, located outside of the up tube **40**, and an inside portion **306**, located within the up tube **40**. The outside portion **304** and inside portion **306** of the down tube **20** are connected to each other by a rotational connector **308**, which, in the embodiment shown in FIG. **18** is at the level of the open lower end **42**. However, this rotational connector **308** could be configured on the down tube **20** at any appropriate vertical position of the down tube **20**.

The rotational connector **308** permits rotation of the inside portion **306** relative to the outside portion **304**, as will be described.

The inside portion **306** has a plurality of radial apertures **310**, which may be randomly disposed on the inside portion **306**, or specifically located, such as beneath a turbine **62**, according to the selected configuration of the generator. Fresh water entering the down tube **20** from a supply source or reservoir passes through the rotational connector **308**, and into the inside portion **306**, where it must exit through one of the radial apertures. The cap **302** mounted at the top end of the inside portion **306** prevents any water or liquid from the down tube **20** from exiting the inside portion **306**, except through the radial apertures **310**.

The inside portion **306** and shaft **64** are secured appropriately in position by shaft supports **68** to prevent wobbling or axial displacement thereof, as has already been described above in other embodiments.

In operation, fresh water exiting the down pipe **20** through the radial apertures **310** is mixed with water of higher salinity entering the lower end **42** of the upper tube **40**. The energy produced by the mixing of the water of higher salinity and lower salinity drives turbine **62**, which in turn rotates the inside portion **306**, the cap **302**, and the shaft **64**. This embodiment permits accurate selection of apertures **310** for releasing of the fresh water into the up tube **40**, in a manner that is fixed with respect to the turbines **62**. Since the radial apertures **310** and turbines **62** are both rotating, the precise location of mixing, and the optimal effect thereof of driving the turbine **62**, can be exploited to improve the efficiency and hence the energy produced by the apparatus of the invention. This is achieved by the use of the rotational connector **308** which allows relative rotation of the inside portion **306**, but ensures no leakage or fresh water escape from the down tube **20** at the position of the rotational connector **308**.

FIG. **19** shows a variation of the apparatus shown in FIG. **18**, including the up tube **40**, the down tube **20** having an outside portion **304**, and an inside portion **306**, the outside and inside portions **304** and **306** respectively being connected by the rotational connector **308**. A cap **302** is provided at the top end of the inside portion **306**, and a series of turbines **62** are mounted on the inside portion **306**, which has a plurality of selectively placed radial apertures **310**. The apparatus in FIG. **19** differs from the embodiment shown in FIG. **18** by the existence of a closure piece **320** over the lower end **42** of the up tube **40**. Since the closure piece **320** prevents sea water from entering the lower end **42** of the up tube **40**, a plurality of holes **322** are provided at locations in the wall of the up tube **40**, as shown in FIG. **19**B, through which the sea water is introduced to the interior of the up tube **40**. One advantage of the embodiment shown in FIGS. **19**A and **19**B is that the sea water can be introduced at the most efficient point, thereby facilitating control of the precise points or areas at which the sea water as well as the fresh water are first introduced and allowed to mix. This factor, coupled with the orientation of turbines **62** on the inside portion **306**, can be used to streamline the efficiency of the apparatus. As was the case with respect to FIG. **18**, the fresh water is only allowed to exit through the radial apertures between the rotational connector **308** and the cap **302**, at a position, flow-rate and orientation which can be controlled and manipulated to advantage.

In FIG. **20** of the drawings, a further embodiment showing a variation of those illustrated in FIGS. **18** and **19** of the drawings is illustrated. In this embodiment, an up tube **40** is provided, as well as a down tube **20** including an outside portion **304**, an inside portion **306** having a plurality of radial apertures **310**, and a cap **302**. At the lower end **42**, a closure piece **320** is provided. In the embodiment shown in FIG. **20**, the rotational device **308** is positioned outside of the up tube **40** and closure piece **320** so as to permit rotation of both the inside portion **306** of the down tube **40**, and the up tube **20**, in response to energy production which causes rotation of the turbine **62**. Thus, rotation about the connector **308** as a result of forces on the turbines **62** thereby rotates the closure piece **320**, up tube **40** and the inside portion **306** of the down tube **20**.

ClibPDF - www.fastio.com

As was the case in the embodiment shown in FIGS. **19**A and **19**B, sea water will enter the up tube **40**, not through the lower end **42**, but through a series of holes **322** of the type shown in FIG. **19**B. Alternatively, instead of having a plurality of holes **322**, one or more slits may be provided in the wall of the up tube **40**, such as those shown in FIG. **7**B or **8**B of the drawings.

The embodiment of FIG. **20** is yet another variation by means of which the precise location of entry of the fresh water and sea water respectively into the up tube **40** can be controlled and exploited to derive maximum energy and power following hydrocrasis and the energy released thereby.

FIG. **21** of the drawings shows a variation of the hydrocratic generator of the invention which uses neither vanes nor turbines on the shaft **64**, but rather a helical screw **330** mounted on the shaft, and which is caused to rotate in response to the energy released by mixing of the water with different salinities. Such forces acting on the helical screw **330** rotate the shaft **64**, which in turn transmits rotational forces to the generator for use as described above.

FIG. **22**A of the drawings shows an alternative embodiment for delivering fresh water from the down tube **20** to a precise location with respect to the fan blades. As shown in FIG. **22**A, an inside portion **306** of the down tube **20** has a plurality of fan blades **62**, also referred to as turbines, mounted thereon. Instead of exiting the inside portion **306** through a plurality of apertures, the fresh water in the inside portion **306** is fed through a fan tube **336** which is mounted on the underside **338** of the fan blade **62**. Towards the outer extremity **340** of the fan blade **62**, the fan tube **336** includes a U-shaped section **342**, terminating in an outlet **344**. Thus, fresh water enters through the inside portion **306**, flows along the fan tube **336**, into the U-shaped section **342**, and exits through outlet **344**. In the embodiment shown in FIGS. **22**A and **22**B, the fresh water thus flows from the interior pipe through a series of smaller pipes located under the fan blades **62** (or helical screw, if this embodiment is used), to the outer edge of the fan blades **62**. The direction of flow is reversed so the fresh water exits in a flow direction which is towards the center of the up tube **40**.

The embodiment shown in FIGS. **22**A and **22**B allows the apparatus to take advantage, once more, of controlling the exit areas for the saline and fresh water, thereby pinpointing the reaction location for maximum energy production and/or use of such energy in a manner which rotates the fan blades optimally. As with the other embodiments, the inside portion **306** of the down tube **20** is attached to a rotating shaft, which in turn attaches to a generator or power mechanism which uses or stores the energy so produced.

Reference is now made to FIG. **23** of the drawings showing yet a further schematic representation of an embodiment of the invention. FIG. **23** shows some of the basic components only, and is mainly intended to illustrate the various locations and multiple turbines which may be used with the system. As such, only the basic apparatus is shown, but it may of course incorporate features and components as described in any one or more of the previous embodiments. This also applies to all embodiments described below.

In FIG. **23**, the up tube **400** is positioned within a body of water **402**, the up tube **400** having an upper end **404** and a lower end **406**. Typically, the body of water **402** is the ocean, and water of relatively high humidity will enter the up-tube **400** through the lower end **406**, and move towards the upper end **404**. However, other models and variations are of course within the scope of this invention.

A down tube **408** is provided, and extends from a reservoir **410** at one end, with the other end **412** of the down pipe/tube discharging into the up tube **400** at or near the lower end **406**. As has been described above, water from the reservoir **410** will have relatively low salinity, and mix with the relatively high salinity water entering through the lower end **406** of the up tube **400**. As has already been described, the mixing of the relatively low and relatively high salinity water produces energy, and power generators are positioned to capture this energy. In FIG. **23**, a first turbine **414** is provided near the upper end **404** of the up tube **400** to capture the energy and therefore generate power. It is to be noted that a second turbine **416** is positioned near the reservoir **410**, along the down tube **408**. Note that the second turbine **416** is shown near the reservoir **410** in FIG. **23**, but it may be placed at other locations along the down tube **408**. The flow of water through the down tube **408** drives the second turbine **412** and energy derived therefrom is used to produce power.

Additionally, a third turbine **418** is provided near the lower end **406** of the up tube **400**. The third turbine **418** is positioned so as to take advantage of flow of water from the body of water **402** into the up tube **400**, and capture and produce power.

Thus, it will be seen from FIG. **23** that various turbines may be placed around the system to take advantage of water flow not only as the result of the mixing of the relatively low and relatively high salinity water, but also to place turbines in other positions where they may be driven by the flow of water, either through the down tube **408**, or upon entering or being driven through the up tube **400**. Note that in FIG. **23**, the second turbine **416** is shown outside of the body of water **402**, although of course it can be placed at a lower level along the down tube **408**, and may additionally or alternatively be located in the body of water **402**.

In FIG. **24***a* of the drawings, another mechanism whereby water may be introduced from a source of low salinity into the up tube is illustrated. Thus, in very schematic form, FIG. **24***a* shows an up tube **430**, positioned substantially vertically, with an upper end **432** and a lower end **434**, as has already been described. Water of relatively high salinity enters the lower end **434**, passes into the up tube **430**, and eventually is discharged through the upper end **432**. While in the up tube **432**, the relatively high salinity water is mixed with a relatively low salinity water delivered by a down pipe or tube **436**. The down pipe **436** is connected to a source of relatively low salinity water, and extends to the lower end **434** of the up tube **430**, and has a discharge opening **438** through which the relatively low salinity water is introduced into the up tube **430**.

Further, the down pipe **436** has attached thereto a secondary down pipe **440** which leads off the down pipe **436** and is spirally or helically wrapped around the up tube **430**. The secondary down pipe **440** has a plurality of holes **442** arranged along its length, and these holes register with corresponding holes in the up tube to permit water to pass from the secondary down pipe **440**, through the up tube **430** and into the interior thereof. FIG. **24***b* shows a cross-section of the secondary pipe **440**, wrapped around the up-tube **430**, with the holes **442**. In this embodiment, therefore, the relatively low salinity water, or fresh water, is introduced into the up-tube **430** not only at the low end **434** thereof, but also along multiple points of entry corresponding to the holes **442**. This may facilitate mixing in a more thorough manner and may therefore also enhance the ability to capture additional power as a result thereof.

ClibPDF - www.fastio.com

Reference is now made to FIG. **25** which shows a further embodiment of the invention in schematic form. Once more, there is provided an up tube **450**, and a down pipe **452**. The up tube **450** has a lower end **454** and an upper end **456**. The up tube **450** is located in a body of water, such as the ocean, and relatively high salinity water enters through the lower end **454**, passes through the up tube **450** and is discharged through the upper end **456**.

The down pipe **452** conveys water from a fresh water source, or water of relatively low salinity, or waste water which has been, or is to be treated, therethrough, and comprises the discharge opening **458** near the low end **454** of the up tube **450**. Additionally, a sleeve **460** is formed around the up tube **450**, and is supplied with water from the down pipe **452** through a branch pipe **462**. The branch pipe **462** conveys water from the down pipe **452** to the inside of the sleeve **460**, and holes in the up tube **450** allow water introduced into the sleeve **460** to enter the up tube **450** for mixing with the relatively high salinity water entering through the lower end **454**. It will be appreciated that this embodiment shows a variation of that shown in FIG. **24***a*, providing additional points of entry of fresh water, or relatively low salinity water, to enhance mixing over a wider volume.

FIG. **26** illustrates a further embodiment of the invention in schematic form, and shows an up tube **470** having an upper end **472** and a lower end **474**. A down pipe **476** conveys fluid of relatively low salinity into the lower end **474** of the up tube **470**. Additionally, a first branch pipe **478** and a second branch pipe **480** branch from the down pipe **476**, and have discharge outlets **482** and **484** respectively within the up tube **470**. The down pipe **476** itself continues and has a discharge outlet **486** near the lower end **474** of the up tube **470**. FIG. **26** illustrates an embodiment where fluid is delivered to the up tube **470** at several locations, once more, to facilitate mixing and to enhance the ability to capture additional power from the mixing process.

In FIG. **27**, an up tube **490** has an upper end **492** and a lower end **494**. A down tube **496** extends from a source of relatively low salinity water, and has a discharge outlet **498** near the lower end **494** of the up tube **40**. The down tube **496** also has a first branch pipe **497** and s second branch pipe **500** which respectively connect to a ring **502** and a ring **504** which circumnavigates the up tube **490** at various locations along its length. The first and second branch pipes **497** and **500** respectively deliver water or fluid to the rings **502** and **504** respectively, and the rings **502** and **504** have multiple holes therein through which water can pass to enter the up tube **490**. FIG. **27***b* is cross-section through the up tube at the location of a ring, providing a further detail as to the configuration. Once more, this particular form of the invention allows a more diverse delivery of low salinity fluid into the up tube **490** to provide a more broad-based and effective mixing mechanism which in turn facilitates capturing of additional power from the mixing process.

Reference is now made to FIG. **28** of the drawings showing in schematic form yet another embodiment of the invention. In this particular embodiment, the hydrocratic generator of the invention is intended for use in conjunction with, for example, a sanitation district which may optionally incorporate a desalination plant. In FIG. **28**, there is shown a body of water **520** having a water surface **522**. Within the body of water **520**, there is located a vertical or up tube **524** having an open upper end **526** and an open lower end **528**. The up tube **524** is preferably located adjacent a land mass **530**, which has built thereon various structures, including a sanitation district plant **532** and a desalination plant **534**. These two plants provide, respectively, fluid of relatively high salinity, and fluid of relatively low salinity, so that the mixing thereof within the vertical tube **524**, along the lines described in the several embodiments above, produce energy which can be captured by a power generator for storage and subsequent use.

A sewer line **538** extends from the sanitation district plant **532**, and has a discharge outlet **540** at or near the lower end **528** of the vertical tube **524**. There is also a pipe or brine line **542** for transmitting fluid from the desalination plant to the inside of the up tube **524**. Within the tube, the discharge contents from the sewer line **538**, and the brine line **542**, each of which has different relative salinity levels, results in a mixture which produces energy. A power generator, which may be in the form of a turbine, is not shown in FIG. **28** of the drawings, but may be positioned at or near the upper end **526** of the vertical tube **524**, so as to capture the energy of the mixture. Additionally, turbines or power generators may be placed at other locations, such as in either one of the sewer line **538** or brine line **542**.

As an alternative, the brine line **542** and sewer line **538** may be juxtaposed so that each discharges into the vertical tube in the reverse form as shown in FIG. **28**. The lower end **528** of the vertical tube **524** is open, so that water from the body of water **520**, such as an ocean, also enters the vertical tube.

In FIG. **28**, the turbine or power generator may be above the upper end **526**, outside of the vertical or up tube **524**, or it may be at the level of the upper end **526** or even below it within the tube. Further, there may be more than one turbine or power generators arranged relative to the tube **524** so as to maximize the capture power in the most efficient manner to optimize energy produced by the mixing of the various fluids.

It should be noted that in all of the embodiments above, the relatively low salinity fluids and the relatively high salinity fluids may comprise fresh water and ocean water respectively, but the invention is certainly not limited to such an arrangement. In fact, the hydrocratic generator of the invention may be used in any situation which can exploit the energy produced by the mixing of relatively low salinity fluid and relatively high salinity fluid, irrespective of their nature. Thus, the fluid may be fresh water, ocean water, desalinated water, sanitation or waste water, or any other fluid, without limitation, the combination of which with one other such fluid will produce the necessary energy by virtue of mixing.

Other Applications/Embodiments

In the preferred embodiments discussed above, the up tube **40** is located in a body of water of high salinity and high negative osmotic potential such as an ocean or a sea. The water of high salinity and high negative osmotic potential enters the up tube **40** in a ratio of greater than 8:1 salt water to fresh water, more preferably 30:1 salt water to fresh water, and most preferably about 34:1 or higher. The mixing of the fresh water of low negative osmotic potential with the sea water of high negative osmotic potential in the up tube **40** causes upwelling and draws sea water into the up tube **40** through the openings. The upwelling water in the up tube **40** rotates propellers **62**, spiral fans **70** or turbines **130**, **261**, which are attached to a drive shaft **64**, **264**. The rotating shaft **64**, **264** turns the electrical generator **66**, **266** generating electrical power from the difference in osmotic potential between the fresh water introduced into the down tube **20** and the water of high salinity which enters the up tube **40** through the openings in the up tube **40**.

ClibPDF - www.fastio.com

Because the method depends on having solutions of different osmotic potentials exiting the down tube **20** and entering the up tube **40**, it is preferable that the source of fresh water exiting the down tube **20** and the source of the water of high salinity entering the up tube **40** continue to have different osmotic potentials over time so that power generation continues over a long period of time. For example, if the body of water of high salinity surrounding the up tube **40** is small, the fresh water exiting the down tube **20** can dilute the water of high salinity after exiting the up tube **40**, reducing the difference in osmotic potential between the fresh water and the water of high salinity. Reducing the difference in osmotic potential between the fresh water exiting the down tube **20** and the water of high salinity entering the up tube **40** reduces the amount of energy available. It is therefore generally advantageous that the body of water of high salinity have a large volume. Locating the up tube **40** in a large body of water having high salinity such as the ocean or the Great Salt Lake is therefore a preferred embodiment.

Alternatively, the invention can be operated between bodies of salt water having different salinity or between waters at different depths of the same body of water. For example, the salinity and temperature of sea water is known to vary with depth and location. In the Hawaiian islands, at a depth of 1000 meters, the ambient water temperature is approximately 35° F., with a salinity of approximately 34.6 ppt. The surface temperature is approximately 80° F. with a salinity of approximately 35.5 ppt. Thus, an osmotic energy potential (albeit small) exists between the surface waters and the waters at 100 meters depth.

While the present invention is disclosed in the context of generating power by directly contacting and mixing fresh water with sea water in an apparatus located in the ocean, it is to be understood that the apparatus and method are not limited to this embodiment. The techniques and concepts taught herein are also applicable to a variety of other situations where aqueous solutions having differing osmotic potentials are available. For example, in one embodiment, the apparatus and method may be applied to a concentrated brine from a desalinization plant being mixed with the less-concentrated brine in sea water. In another embodiment, a treated sewage effluent, a fresh water stream, can be mixed with sea water. If desired, an osmotic membrane or osmotic water exchange plenum may be provided at the outlet end of the down tube and/or at the outlet (top) of the up tube in order to increase the efficiency of energy production. The apparatus and method may thus be applied to a wide range of applications in which two solutions of differing osmotic potential are available.

The various embodiments of the invention disclosed and described herein are exemplary only. As such, these example embodiments are not intended to be exhaustive of all possible ways of carrying out the invention or even the most economical or cost-efficient ways of carrying out the invention on a commercial scale. Many of the example embodiments disclosed and discussed herein are based on experimental testing of small-scale models embodying certain features of the invention. These models and the test results reported herein may or may not be directly relevant to a full-scale power production facility utilizing the invention. However, those skilled in the art will readily recognize from the examples disclosed and discussed herein the utility of the invention in terms of its broader scope, and how it may be beneficially utilized in a commercial power production facility to efficiently harness the osmotic energy potential between fresh water run-off and sea water (or other convenient bodies of water/solvent having different solute concentrations).

Thus, although this invention has been disclosed in the context of certain preferred embodiments and examples, it will be understood by those skilled in the art that the present invention extends beyond the specifically disclosed embodiments to other alternative embodiments and/or uses of the invention and obvious modifications and equivalents thereof. Accordingly, it is intended that the scope of the present invention herein disclosed should not be limited by the particular disclosed embodiments described above, but should be determined only by a fair reading of the claims that follow.

The invention claimed is:

1. A mixing apparatus for mixing relatively low salinity fluid with relatively high salinity fluid, the mixing apparatus comprising:

a housing having an upper end and a lower end, a fluid inlet at or near the lower end, and a fluid outlet at or near the upper end, wherein the relatively high salinity fluid in use enters the housing through the fluid inlet and is discharge from the housing through the fluid outlet;

a feed tube having a first end connectable to a source of relatively low salinity fluid and second end for introducing relatively low salinity fluid to the housing to mix the relatively high salinity fluid with the relatively low salinity fluid to form a fluid mixture; and

at least one power generator associated with the housing, the power generator being driven by the mixing of the relatively high salinity fluid with the relatively low salinity fluid.

2. A mixing apparatus as claimed in claim **1** wherein the housing comprises a substantially vertically oriented up tube.

3. A mixing apparatus as claimed in claim **2** wherein the down tube has a cross-sectional area and the up tube has a cross sectional area, and the cross sectional area of the down tube is 5–50,000 times smaller than the cross sectional area of the up tube.

4. A mixing apparatus as claimed in claim **2** wherein the down tube has a cross-sectional area and the up tube has a cross sectional area, and the cross sectional area of the down tube is 50–2,000 times smaller than the cross sectional area of the up tube.

5. A mixing apparatus as claimed in claim **1** wherein the power generator comprises a plurality of propellers and a shaft, the propellers being located in the housing, and an electrical generator coupled to the shaft for generating electrical power.

6. A mixing apparatus as claimed in claim **1** wherein the power generator comprises a vane drum having a plurality of vanes, wherein them plurality of vanes rotate a shaft when connected with the fluid mixture, and an electrical generator connected to the shaft.

7. A mixing apparatus as claimed in claim **1** wherein the relatively low salinity water is selected from the group consisting of fresh water, waste water, desalination water, or a mixture of one or more thereof.

8. A mixing apparatus as claimed in claim **1** wherein the high salinity water is selected from the group consisting ocean water, waste water, or a mixture thereof.

9. A mixing apparatus as claimed in claim **1** comprising a plurality of power generators.

10. A mixing apparatus as claimed in claim **9** comprising three power generators, comprising a first power generator

ClibPDF - www.fastio.com

positioned so that at least a portion of the relatively high salinity fluid which enters the housing flows therethrough, a second power generator positioned so that at least a portion of the relatively low salinity fluid in the feed tube flows therethrough, and a third power generator positioned so that at least a portion of the fluid mixture flows therethrough.

11. A mixing apparatus as claimed in claim **2** further comprising a secondary feed tube connected to the feed tube, the secondary feed tube forming a spiral about the up tube, the secondary feed tube having a plurality of apertures therein through which fluid can flow from the secondary feed tube, the up tube having a plurality of corresponding apertures for receiving fluid from the apertures in the secondary feed tube.

12. A mixing apparatus as claimed in claim **2** further comprising an annular sleeve located about at least a portion of the up tube, a secondary feed tube extending between the sleeve and the feed tube, and communication ports between the sleeve and the up tube for fluid flow.

13. A mixing apparatus as claimed in claim **1** further comprising a first branch feed tube and a second branch feed tube, the first and second branch feed tubes extending from the feed tube and positioned within the housing so as to discharge relatively low salinity fluid at different locations within the housing.

14. A mixing apparatus as claimed in claim **2** further comprising a first branch feed tube and a second branch feed tube, a first annular ring about the up tube, a second annular ring about the up tube, the first branch feed tube connecting to the first annular ring and the second branch feed tube connecting to the second annular ring, the first and second annular rings having communication ports with the inside of the up tube to permit relatively low salinity fluid to flow from the feed tube, through the first and second branch feed tubes and first and second annular rings respectively into the up tube.

15. A mixing apparatus as claimed in claim **1** wherein the housing is located in a body of water, a first fluid source for relatively high salinity fluid is located on an adjacent land mass, the feed tube extends from the first fluid source to the inside of the housing, a second fluid source of relatively low salinity fluid is located on the land mass, and a second fluid source feed tube extends between the second fluid source and the housing, the feed tube and the second fluid source feed tube for discharging fluid into the housing to enable mixing thereof to comprise at least a part of the fluid mixture.

16. A mixing apparatus as claimed in claim **15** wherein the first or second fluid source is a waste water disposal.

17. A mixing apparatus as claimed in claim **15** wherein the first or second fluid source is a sanitation plant.

18. A mixing apparatus as claimed in claim **15** wherein the first or second fluid source is a brine.

19. A mixing apparatus as claimed in claim **15** wherein the housing is located in a body of water whose salinity is less than the first fluid source and more than the second fluid source.

20. A method for generating power from the difference in osmotic potential between a source of relatively low salinity water and a source of relatively high salinity water, said method comprising:

locating a housing in a body of fluid, the housing having an upper end and a lower end, a fluid inlet at or near the lower end, and a fluid outlet at or near the upper end, wherein the relatively high salinity fluid enters the housing through the fluid inlet and is discharged from the housing through the fluid outlet;

connecting a feed tube by means of a first end thereof to a source of relatively low salinity fluid for conveyance of the fluid to a second end for introducing relatively low salinity fluid to the housing and mixing the relatively high salinity fluid with the relatively low salinity fluid to form a fluid mixture; and

positioning at least one power generator at or near the housing, the power generator being driven by the mixing of the relatively high salinity fluid with the relatively low salinity fluid.

21. A method as claimed in claim **20** further comprising the step of locating a plurality of power generators to capture flow of water.

22. A method as claimed in claim **20** further comprising the step of introducing relatively low salinity fluid into the housing at multiple points.

23. The method as claimed in claim **20** wherein the mixture comprises relatively high salinity water and relatively low salinity water in a ratio of at least 8 to 1.

24. The method as claimed in claim **20** wherein the mixture comprises relatively high salinity water and relatively low salinity water in a ratio of at least 30 to 1.

* * * * *

ClibPDF - www.fastio.com